RCA-RIDER CHANALYST

TYPE NO. 162C

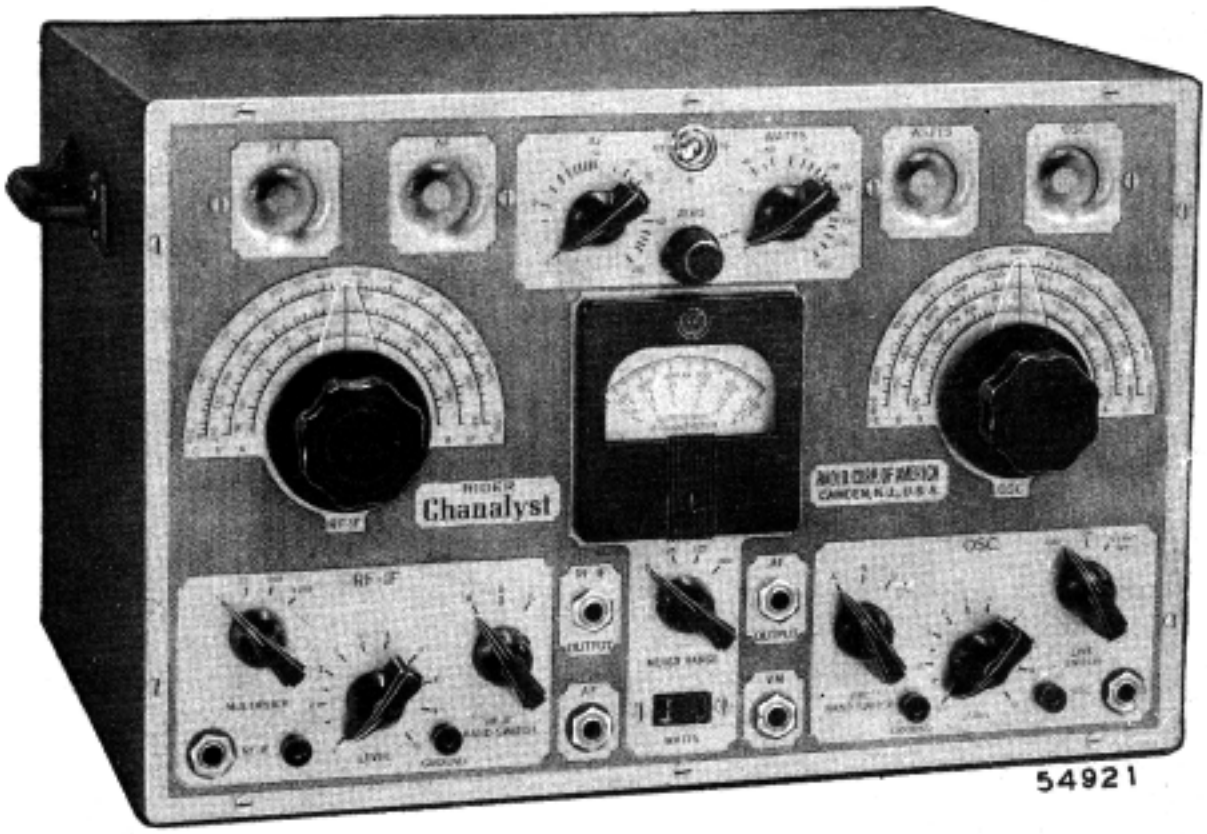

RADIO CORPORATION OF AMERICA

Camden, New Jersey, U. S. A.

IB-32022-6

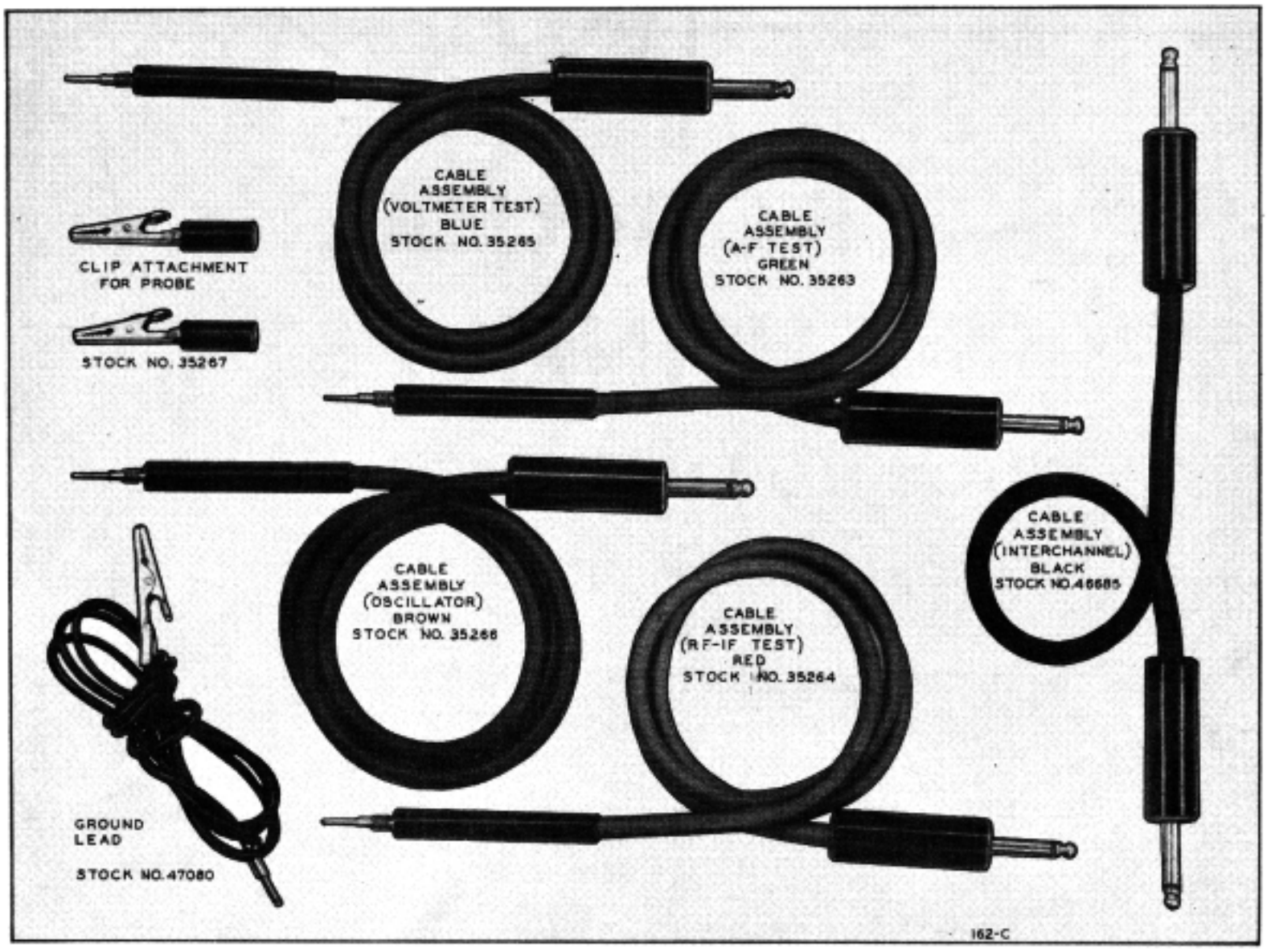

Cable Connector Leads supplied with the Chanalyst

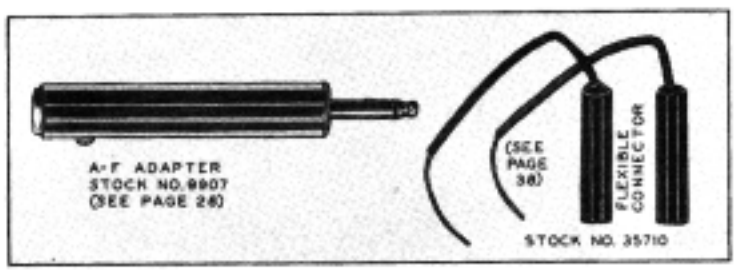

Additional parts, not regularly supplied with the instrument.

SPECIFICATIONS

Mechanical Data

Overall dimensions: Height 9", Width 16", Depth 10¾"
Weight: Shipping, 28 lbs.
External Finish: Case, Blue-gray wrinkle lacquer. Panel, Reverse-etched brush chrome.

R.F.-I.F. Channel

3-Stage T.R.F. Amplifier
Frequency Range 96-1700 Kc.
Output Indication Magic Eye
Calibration Accuracy, ±2%
Sensitivity (to close Magic Eye without probe lead) 80 microvolts (or better)

Oscillator Channel

1-Stage T.R.F. Amplifier
Frequency Range, 600-15,000 Kc.
Output Indication, Magic Eye
Calibration Accuracy, ±2%

A. F. Channel

1-Stage Audio Amplifier
Frequency Range, 150-50,000 cycles
Sensitivity (to close Magic Eye) 0.1 volt (approx.)
Output Indication, Magic Eye

Electronic Voltmeter Channel

Volt Range—0-5, 25, 125, 500 d.c.
Center Scale, Measures Either Polarity
Input Resistance, 11 megohms
Output Indication, Meter

Wattage Indicator Channel

Power Range, 30-250 watts
Output Indicator, Magic Eye

Power Supply

105-125 Volts, 50/60 Cycles, 60 Watts, equipped with a 1 ampere fuse

Tube Complement

1—RCA 6SK7 (V1)	1st R.F.-I.F. Amplifier
2—RCA 6K7 (V2, V3)	2nd & 3rd R.F.-I.F. Amplifier
1—RCA 6H6 (V4)	R.F.-I.F. Diode & Wattage Diode
4—RCA 6E5 (V5, V7, V9, V11)	Magic Eye
1—RCA 6AC7/1852 (V6)	Oscillator Amplifier
1—RCA 6Q7GT/G (V8)	A.F. Amplifier, Osc. Diode, A.F. Diode
1—RCA 76 (V10)	V.M. Amplifier
1—RCA 6X5GT/G (V12)	Rectifier

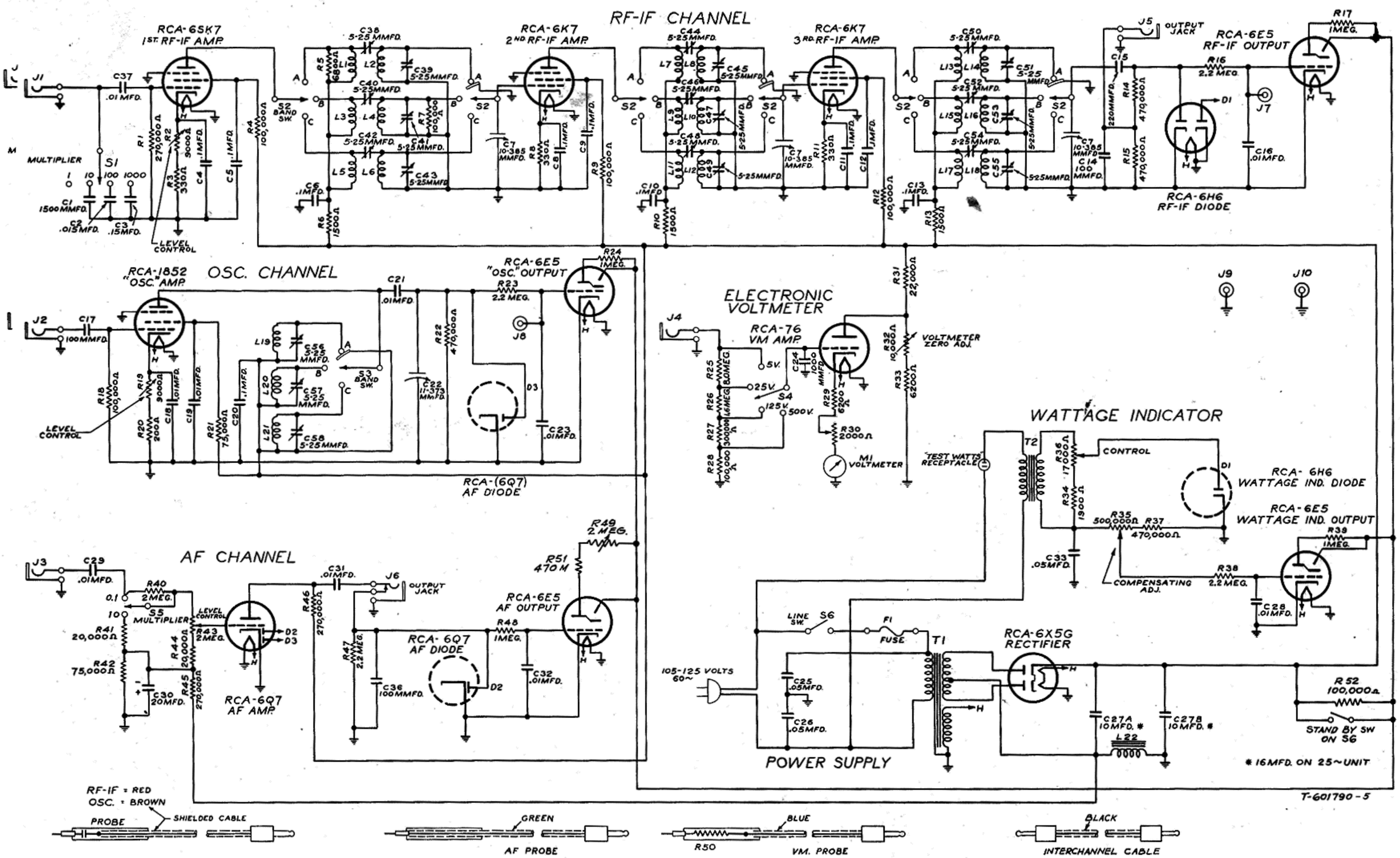

Figure 1—Schematic Circuit Diagram—Type No. 162-C, Code 643

***NOTE:** R24 can be increased up to 3 megohms to increase sensitivity of 6E5 "OSC." Output Indicator.*

AN EXPLANATION OF HOW EASY IT IS TO USE THE RCA-RIDER CHANALYST FOR LOCATING DEFECTS IN RADIO RECEIVERS OF ALL TYPES

It's Important that You Read this Introduction for A Complete Understanding of this Book

Each new year's crop of radio receivers brings with it additional "*headaches*" for the servicemen—new circuits, each with its tricky problems—innovations, new features that follow as a natural result of the march of progress. However, these improvements have placed quite a burden on the time and patience of the servicemen and have previously required that he constantly learn—and unlearn—many technical facts.

This problem is real; but, in the RCA-Rider Chanalyst, its solution has at last been found. The RCA-Rider Chanalyst provides a method of localizing troubles that has universal application to all receiving sets—old or new, simple or complicated of circuit—a method that can be easily learned and simply applied—a method that does not involve new theories. In order that it be universal in every sense of the word, this method is based on a fundamental factor that is common to every receiver—past and present, and to those which are certain to be developed in the future. And there is but one thing that is a common denominator of ALL receivers, that thing is the SIGNAL.

However, in seeking to develop a method of trouble shooting based on testing the signal, one definite limitation was found.

There existed no testing instruments, within reach of the average serviceman's pocket, which would perform such a test. So, was born the idea of the Chanalyst, which is the most sensational development in the history of radio servicing.

This remarkable new instrument localizes troubles by tracing the course of a signal through a receiver from antenna post to loudspeaker voice coil and, quickly and accurately, determines the condition of that signal and other related factors at any and every point. The value of such an instrument is instantly recognized when you stop to consider that in any radio receiver "The Signal's the Thing."

When you are called into a customer's home it is because something has gone wrong with the receiver—something has happened to the signal. There is one thing in which the customer is vitally interested: the restoration of the signal to normalcy, and it is your job as a serviceman to ascertain where the trouble is and then to correct it as quickly as possible. Now the localization of the trouble can be easily accomplished by checking the signal from the moment it enters the receiver at the antenna post and tracing its path throughout the various circuits until it energizes the speaker. If at any point the signal departs from normal, then that particular portion of the set can be identified as the seat of the trouble. It's as simple as that—this system of trouble-shooting now made possible with the RCA-Rider Chanalyst.

With this instrument the servicing of all receivers is reduced to the same level. No matter how complicated the receiver—no matter what type tubes are used—no matter how old or how new the receiver may be—the same simple, fundamental process of trouble localization is employed. Amplification — rectification — frequency conversion—all the functions of the components in a radio receiving system are checked with the greatest ease. With the RCA-Rider Chanalyst you can tell instantly if the signal is at its proper frequency, if it is being stepped-up as it should be, if it takes on hum or is otherwise distorted—if it is present or absent. And more: you can as quickly check the various operating and control voltages that influence the signal in its passage through the set—in all types of receivers. All this you can do without disturbing the normal operation of the receiver. The receiver power supply can be checked in its entirety; the condition of resistors and condensers can be determined without their tedious, time-taking removal from the circuit.

It makes no difference how efficiently troubles have been diagnosed in your service shop before this, or how quickly the work has been done, we claim that the use of the RCA-Rider Chanalyst will appreciably increase your efficiency and speed. It will solve those "TOUGH" ones in a surprisingly short time. No matter how good a serviceman you may be in locating the part in a receiver that is causing the signal to depart from normal, a certain amount of guess-work is inevitable. As a matter of fact, the more experienced the serviceman, the more he is inclined to depend upon guessing. Although this practice might appear to save time there inevitably comes along "THAT JOB" which cannot be "GUESSED" and the job-average time goes sky-high. Remember, there is no guess-work in servicing when the RCA-Rider Chanalyst is used—you know immediately and positively all the factors that influence

the signal in its course through the receiver. So, if you but follow the system prescribed for the Chanalyst on every job, you will actually save hundreds of hours each year.

Although the RCA-Rider Chanalyst was introduced to the radio servicing industry only a relatively short time ago, it has already been proved in the hands of servicemen and is, without any doubt, the most enthusiastically received development in the history of radio servicing instruments. In the following pages you will find a description of the Chanalyst and how it is used in tracing down trouble in a receiver. Analyze what this instrument can do for you and we know that you will see why the Chanalyst has brought forth such a volume of sincere praise from servicemen in all parts of the country.

Then read how the actual tests on different parts of a receiver are performed. And remember, all these tests and checks can be made without disturbing the functioning of the receiver itself. When you have all the facts, you will not need an expert to demonstrate the Chanalyst to you. Take one of your repair jobs to your jobber and actually demonstrate the Chanalyst to yourself. We are so firmly convinced of the simplicity of operation of this instrument and its great worth to the servicemen that we are willing to "LEAVE IT UP TO YOU" after the RCA-Rider Chanalyst has thus performed "IN YOUR OWN HANDS."

Men all over the country, who are now using the Chanalyst daily, are proving our claims to be true. Prove to yourself by going to your jobber's and using the instrument on an actual job. Then you, as have hundreds of other servicemen before you, will want a Chanalyst to make your work easier, quicker, more accurate, and, last but not least, to make it more profitable.

THE RCA-RIDER CHANALYST CHECKS EACH PART BY CHECKING ITS FUNCTION

The RCA-Rider Chanalyst is the pioneer instrument offered to the serviceman that enables true dynamic and functional testing of radio receivers. *And this means any radio receiver,* old or new, and even those of the future. True dynamic testing means testing each and every circuit—each and every tube while the receiver is operating and *without interfering with the performance of the receiver.* This book explains how simply these functional tests are made—*tests that no other instrument can make!*

1. TUBE TESTING—Octal, loktal, metal or glass, prongs on bottom, top or sides, tubes of all types, past, present or future—*the Chanalyst tests one and all under true dynamic conditions—right in the receiver—by checking the function of the tube in its circuit and under its operating conditions.* The Chanalyst tells you how much gain an amplifier tube has—r-f, i-f, a-f, it checks them all! A tube may work better in one stage than in another. A true dynamic test recognizes this fact. With the Chanalyst you can pick the best tube for a specific function under the exact operating conditions present in the receiver you are testing. . . . If it is a mixer tube, the Chanalyst checks the conversion gain—if it is an oscillator, the Chanalyst measures the signal output at any frequency in its operating range. *Whatever the function of the tube, the Chanalyst provides you with a true functional test of its operation!*

Noise, gas, microphonics, and other tube defects are instantly revealed by the Chanalyst, not by some artificial test, not by some arbitrary combination of voltages and loads, *but by testing the tube under the exact conditions that the tube functions in the receiver in which it is used.* . . . And these tests are made quickly, as fast as you can move a probe from one point to another. . . . No buttons to push—no charts to read. You will never have to buy adaptors for new tubes.

2. POWER CONSUMPTION TESTS—True dynamic testing of power supply systems means measuring the receiver power consumption while it is in operation under its actual load. The Chanalyst does just that. . . . No more waiting for the odor of burning tar to indicate that the receiver power transformer is shorted; the Chanalyst reveals the short instantly. No more risking prolonged high-voltage surges on condensers due to open circuits in power supply systems. . . . The Chanalyst points out these, too. . . .

3. GAIN-PER-STAGE TESTS — True dynamic gain in transformers and tubes is measured under actual operating conditions by means of the Chanalyst! With the Chanalyst you measure signal amplification in all parts of the receiver by feeding the signal to the INPUT terminals of the receiver and noting the signal level in every amplifying stage. With the Chanalyst, you make all these measurements faster and more accurately than with all other existing service equipment.

4. OPERATING VOLTAGE MEASUREMENTS—How often have you wanted to read d-c operating voltages while the receiver was in operation and receiving a signal? *Only in this manner can you determine the actual AVC voltage reaching that controlled tube!* True dynamic operating voltage measurements are those made upon an operating receiver with the signals in the circuit. The RCA-Rider Chanalyst permits you to measure such voltages without interfering with the operation of the receiver—without reducing the voltages—without affecting the signal. ANY AND ALL D-C VOLTAGES, WHETHER POSITIVE OR NEGATIVE, CAN BE CHECKED INSTANTLY—EASILY—ACCURATELY. It checks gassy tubes, too. Shows you how distortion gradually builds up as gas increases, by measuring the change in voltage across the grid resistor in the tube circuit.

AFC alignment is ordinarily difficult; not with the Chanalyst. With the Electronic Voltmeter, the circuit can be easily and accurately aligned. It checks oscillator performance, too. Just a turn of the gang condenser with the Electronic Voltmeter connected instantly reveals "DEAD SPOTS," uneven output at any portion of any band of an all-wave receiver clear up to 100 megacycles. That's true fundamental testing! This RCA-Rider Chanalyst book tells you how simply these tests are made.

5. TESTING SUPERHETERODYNE OSCILLATORS—The RCA-Rider Chanalyst provides a complete dynamic test of superheterodyne oscillators. The Chanalyst tells you the operating frequency at which the oscillator is working,—if the oscillator is tracking—if it drifts during operation—if its output is constant or otherwise. . . . And if the oscillator is intermittent, if it "CUTS-OUT," the Chanalyst tells you so. . . . "NO GUESS-WORK." . . . The RCA-Rider Chanalyst give you *complete, definite information* of the type you *must* know to do good servicing.

6. TESTING CONDENSERS—The only real dynamic test of a condenser is that which determines just how well it does its job in the receiver in which it is installed. This the Chanalyst tells you . . . WITHOUT removing the condenser from the set. If it is a by-pass condenser, whether in an r-f, i-f or a-f system, the Chanalyst shows you definitely and conclusively whether it is performing its function, whether a filter condenser really filters, whether a coupling condenser really does couple. And if it leaks, the Chanalyst shows this, too.

In other words, *the RCA-Rider Chanalyst tests all condensers*, whether in r-f, i-f, oscillator, a-f or filter sections of the receiver, *not* by some arbitrary test, but by showing you whether or not they are functioning properly in the receiver.

7. LOCALIZING DISTORTION—If reception is distorted, some component in the receiver under test is not performing its proper function. By combining the exclusive Chanalyst signal tracing method with a simple aural or visual test, the fault is immediately localized. You listen to the actual signal, you hear it when it is clear and, as soon as you reach the section where the distortion originates, you hear the distortion. You have then localized the trouble. What could be simpler?

8. LOCALIZING NOISE—Any receiver component can cause noise. But no matter where the fault arises, the Chanalyst points it out, definitely and unmistakably. *And you can localize the trouble faster than by any other method.* Just read the simple instructions in the book.

9. INTERMITTENT OPERATION—Only the Chanalyst solves the problems of intermittent receiver servicing . . . the greatest "HEADACHE" in the business. With the Chanalyst you can divide a receiver into several sections and test them simultaneously, under actual operating conditions, WITHOUT disturbing a single circuit or affecting the performance of the receiver. When the receiver 'CUTS-OUT," a glance at the Chanalyst indicator tubes tells you just where the trouble starts. *No other test instrument can do this.*

These are only a few of the multitude of true dynamic and functional tests possible with the Chanalyst. Read this book from cover to cover. Note how others have profited by using the Chanalyst. *The Chanalyst will do as much for you.* Don't handicap yourself. You can't make money servicing if you aren't properly equipped. Go to your jobber and try the RCA-Rider Chanalyst. Compare it with any other test instrument . . . or group of test instruments.

TABLE OF CONTENTS

IMPORTANT PRELIMINARY INSTRUCTIONS

Do not attempt to use the RCA-Rider Chanalyst without first reading the following instructions:

POWER SUPPLY—The RCA-Rider Chanalyst, Type No. 162C, is designed for 105-125 volt, 50-60 cycle operation. Before plugging the Chanalyst in the power supply, be sure that the line frequency and voltage are correct for the instrument.

STAND-BY SWITCH—A stand-by switch has been incorporated in this model, which allows the Chanalyst to remain turned on in an operating condition without impairing the brilliancy life of the Magic Eye tubes. When the switch is in the stand-by position, the Magic Eyes act as pilot lights, the instrument is "warmed-up" ready for operation and the life of the Eyes greatly increased.

GROUND LEAD—The ground lead of the Chanalyst must be clipped to the chassis or other voltage return point in the receiver under test.

ELECTRONIC VOLTMETER—The center zero should be set by means of the small knob, marked "ZERO" located directly above the meter. The probe point should be touched to the front panel while this adjustment is made. The voltmeter must always be used in conjunction with its special voltmeter cable (blue).

WATTAGE INDICATOR—This channel must be used only in connection with receivers operating on alternating current power.

STRAY PICK-UP—When using the probes, take care to hold each one with the fingers well back from the probe tip. This avoids extraneous pick-up due to the high sensitivity of the channels.

When testing circuits, place the probe point directly on the tube prongs or grid caps. The tube prong may not make good contact with the socket or the grid lead connection may become unsoldered from the grid cap. In this way, we can tell if the signal or voltage under test is actually reaching the tube elements.

When the point at which the signal or voltage disappears is noted, we can check back with the probe point to intermediate connections to find out precisely where the trouble is first present. This check will uncover broken connections, rosin or corroded joints, open-circuited leads or components.

Be sure to make good electrical contact with the probe point. In some cases it may be necessary to scratch the metal with the probe point to get a satisfactory connection.

RCA-RIDER CHANALYST
TYPE No. 162C

The RCA-Rider Chanalyst is a device whereby it is possible to trace the passage of a signal through a radio receiver, establish the character of the signal in any portion of the radio receiving or amplifying system, and to identify the nature and location of the fault existing in the receiver or amplifier with maximum accuracy and the greatest possible speed. To accomplish this end, the RCA-Rider Chanalyst contains a series of electrical circuits whereby it is possible to probe in *every* circuit of the receiver *without interfering with its operation.*

The manner in which the RCA-Rider Chanalyst is used for trouble shooting is as follows:

1. To check the power consumption of the radio receiver under test.
2. To feed a signal of known frequency into the receiver, across the antenna-ground terminals.
3. To check the passage of this signal through the r-f, i-f and audio systems of the receiver. inclusive of the operation of the receiver oscillator, and note its general character.
4. To measure d-c voltage in whatever portion of the receiver comes under suspicion as a result of the conclusions derived from the signal tracing test.
5. To apply other tests in accordance with the conclusions arrived at after the signal tracing test.

Of utmost value during the process of trouble localization is the fact that as a result of the design of the Chanalyst *both signal and voltage* conditions existing in *any* portion of the radio receiver *can* be simultaneously checked and *nothing need be taken for granted.*

What is in the RCA-Rider Chanalyst—The Chanalyst contains five separate electrical circuits. These are:

1. The RF-IF Channel.
2. The Wattage Indicator or Power Consumption Indicator Channel.
3. The Oscillator Channel.
4. The Audio Frequency Channel.
5. The D-C Electronic Voltmeter Channel.

These names are used more as a means of identification than to state the exact operating scope of the channels. This will become evident from the description of the exact nature of these channels and the wide scope of their application.

The speed with which you can work is as fast as you can move a test probe to whatever points in the receiver you wish to check.

No matter how rapidly you have been able to locate trouble in the past, the RCA-Rider Chanalyst will enable you to reduce this time by an almost incredible margin. The tests you have not been able to make heretofore now can be made with the Chanalyst.

THE RF-IF CHANNEL

The RF-IF Channel shown in schematic form in Figure 1 is a three-stage tuned radio frequency amplifier, terminating in a diode detector and an electron-ray indicator tube (Magic Eye). This entire assembly constitutes a three-band receiver operative over a frequency range from 96 kc to 1700 kc, thus embracing the complete intermediate frequency range found in commercial broadcast receivers and the conventional broadcast band. Some of the frequencies within the i-f band are also identified as the "weather" band in broadcast receivers. The three frequency bands covered by this channel are:

Band A 96 kc to 260 kc.
Band B 240 kc to 630 kc.
Band C 600 kc to 1700 kc.

These three bands are identified upon the frequency scales engraved upon the panel and the "RF-IF BAND SWITCH" also bears identifying letters. The various controls associated with the RF-IF Channel are shown in Figure 2.

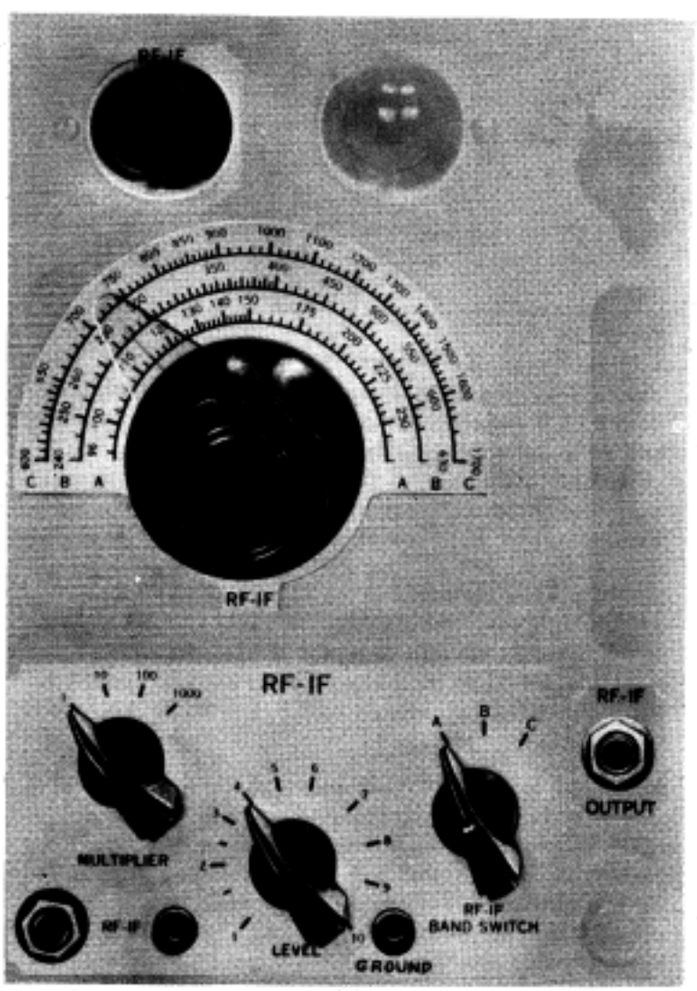

Figure 2

The jack identified as J1 in the schematic is the "RF-IF" input jack shown in the lower left hand corner of the rf-if assembly of controls in Figure 2. This is the jack that accommodates the telephone plug end of the rf-if pick-up cable. This cable (red) contains a very small capacity of approximately 1.0 micromicrofarad at the tip end, within the probe handle.

The RF-IF Channel also contains an output jack J5 in Figure 1, which is connected across a portion of the diode rectifier load. This jack is located below and to the left of the meter, as shown in Figure 2, marked "RF-IF OUTPUT."

The tip jack shown in Figure 2, adjacent to the "RF-IF" input jack, connects to the "RF-IF" Magic Eye control grid and is installed on all RCA-Rider Chanalysts.

Use of the RCA UHF Converter (Stock No. 164) extends the applications and advantages of the RCA-Rider Chanalyst to 80 megacycles.

THE RCA MAGIC EYE—If you examine the schematic in Figure 1, you will note that the RF-IF assembly of parts comprises what is a complete t-r-f receiver, with the RCA-6E5 electron-ray tube (Magic Eye) as the final output indicator. Indications upon the Magic Eye appear as changes in the shadow angle. Without any signal input into the RF-IF Channel, the RCA-6E5 Magic Eye is wide open, that is, maximum shadow angle exists. When a signal voltage is present across the input terminals and the channel is resonated to the signal frequency, the indicator tube shadow angle decreases and approaches zero, that is, the Magic Eye closes. Thus, the variations in shadow angle upon the indicator tube can be interpreted in variations of signal voltage at the input of the channel.

If the signal voltage at the input of the channel is sufficiently great, the eye "overlaps." Reducing the signal voltage at the input of the channel causes the eye to open or the shadow angle to increase. Thus the RCA-6E5 Magic Eye is a reference indicator which shows the presence of a signal at the input of the channel.

"MULTIPLIER" AND "LEVEL" CONTROL—By means of the combined action of the "MULTIPLIER" and "LEVEL" control it is possible to check or to compare signal voltages over a calibrated ratio of 10,000 to 1. The "LEVEL" control covers a continuous range of 10 to 1 and the "MULTIPLIER" covers a range of 1000 to 1 in four fixed steps which vary by a factor of 10. Therefore, it is possible by means of these two controls to maintain a constant indication upon the "RF-IF" Magic Eye when the signal voltage at the input of the RF-IF Channel (the tip of the RF-IF (red cable) probe) varies over a range of 10,000 to 1.

In turn, it is possible to approximate the change in signal voltage values at the input of the Channel by noting the adjustment of the "MULTIPLIER" and "LEVEL" controls required to maintain a constant indication upon the Magic Eye. To secure proper action of the "MULTIPLIER" control, the RF-IF pick-up (red) cable must be used.

When the rf-if pick-up cable is not used and contact is made by means of a direct connection with the grid circuit of the first amplifier tube, as when using the AF (green cable) probe, the "MULTIPLIER" is not used. Here the "LEVEL" control provides for operation over a range of a 10-to-1 change in signal voltage.

The voltage gain of an r-f or i-f transformer, or tube, or complete stage is indicated on the RF-IF "MULTIPLIER" and "LEVEL" controls. For example, Figure 2A shows typical settings of these controls when checking the signal first at the grid, and then at the plate of an i-f tube. With the rf-if (red cable) probe at the grid of the i-f tube, both controls are set at "1," and the test oscillator output is adjusted to just close the "RF-IF" Magic Eye. The rf-if probe is then moved to the plate of the i-f tube without disturbing the test oscillator. The "RF-IF" Magic Eye will now overlap, and the rf-if "MULTIPLIER" and "LEVEL" controls should be readjusted so the "RF-IF" Magic Eye just closes. In this example, the "MULTIPLIER" is set at 10 and the "LEVEL" control is set at "7," indicating a gain of 70 from grid to plate on the i-f tube.

As a general rule, a signal of about 5 to 7 millivolts is required at the probe tip to close the Magic Eye when the RF-IF (the red cable) probe is used and the "MULTIPLIER" and "LEVEL" controls are at "1." However, as you will see later, it is not necessary to operate with the eye closed, so that much smaller values of signal voltage can be used. As a matter of fact, the sensitivity of the RF-IF Channel at the control grid of the first amplifier tube, that is, using a direct probe, is between 50 to 70 microvolts to close the eye. Certain operations to be described later can be carried out with as little as 5 to 10 microvolts input to the RF-IF Channel.

If at any time only the "LEVEL" control is used and the reference setting is obtained with the "LEVEL" control at some figure other than "1," the ratio between the second setting required to restore the indicator to the original reference value and the original setting is the gain in voltage. For example, if original reference indication upon the Magic Eye or the voltmeter is secured with the "LEVEL" control at "2" and the second setting of the "LEVEL" control is "9," the gain in voltage is 9/2 or 4.5. If the original setting of the "*level*" control was "1.5" and the second setting was "7.5," then the gain in voltage is 7.5/1.5 or 5, etc.

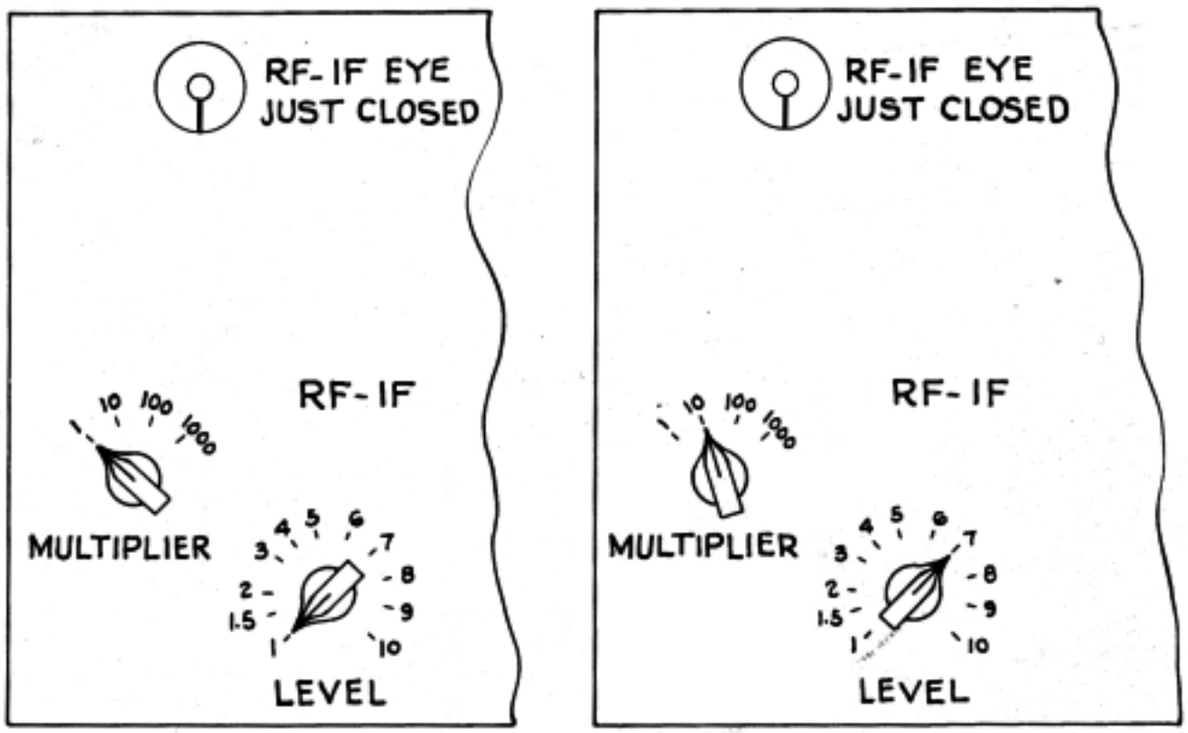

Figure 2a

The accuracy of these gain calibrations is within about 20 percent. You may, of course, find if a quantitative check is made, that the accuracy is greater because the Multiplier capacities are held to within a 5 percent tolerance, but in general, the aforementioned variation is quoted. This degree of accuracy is sufficient for all general use, particularly for service work.

ELECTRONIC VOLTMETER IN RF - IF CHANNEL—Chanalysts are equipped with a pin-jack located on the front of the panel adjacent to

the RF-IF input jack. The purpose of this jack is to enable connection of the Electronic Voltmeter to the control grid of the RF-IF Magic Eye. This connection is made by inserting the metal tip of the Voltmeter pick-up cable (blue) probe into the pin jack, and the plug end of the cable into the Voltmeter jack.

The purpose of the connection is to enable the use of the voltmeter as a reference indicator in addition to the RF-IF Magic Eye, particularly with weak signals.

In addition, the meter type reference indicator functions in excellent manner when the Chanalyst is used for checking antenna pick-up. A similar pin jack is located in the Oscillator Channel and its use is discussed in the chapter devoted to the Oscillator Channel.

APPLICATIONS OF THE RF-IF CHANNEL—In general, the applications of the RF-IF Channel are as listed below. These applications naturally embrace all minor uses which come within these main headings. Examples will be given later.

1. *As a conventional comparison broadcast receiver* (without audio amplifier), substantially free from distortion and which operates over a range from 96 kc to 1700 kc. (To listen to the signal a pair of high impedance headphones are plugged into the output jack, J5 in Figure 1, or if desired, a separate audio amplifier may be connected to this jack so as to amplify the signal still further. The manner in which the Audio Frequency Channel available in the Chanalyst can be used as this supplementary amplifier is described elsewhere.) When used as a conventional broadcast receiver, any wire used as the antenna is connected to the input circuit via any telephone cable which is inserted into the "RF-IF" input jack.

2. *As a means of checking antenna pick-up* operated over the frequency range from 96 kc to 1700 kc, with the voltmeter connected to the RCA-6E5 Magic Eye control grid and with the channel calibrated in signal input and d-c voltage at the Magic Eye control grid. (As a receiver, the various channels are substantially flat in gain over the various ranges and will develop about 1.0 volt d-c at the Magic Eye control grid for each 12 microvolts of signal at the first r-f tube control grid.)

3. *As a means of establishing antenna pick-up* of signals from broadcast transmitters operating over the 96 kc to 1700 kc frequency range.

4. *As a means of ascertaining the approximate frequency* of any unknown signal, modulated or unmodulated and lying within the 96 kc to 1700 kc range. The source of the unknown signal is of no consequence.

5. *As a resonated vacuum tube voltmeter* to establish the relative gain or loss of r-f, i-f and oscillator signals present in the different parts of a radio receiver, and to check the condition of alignment.

6. *As a means of establishing the presence, absence, and level of signals* at points in a radio receiving system where they are supposed to exist and also their presence where they are not supposed to exist. The latter includes conditions when signals of one frequency find their way back into circuits tuned to other frequencies.

7. *As a means of listening to or viewing the signal* to check for hum, distortion or noise in any portion of the r-f or i-f systems of a radio receiver, when these systems operate within the frequency range of 96 to 1700 kc. This can be done by listening to the signal with headphones or observing it with an oscilloscope.

8. *As a means of establishing the origin of noise* developed in the r-f or i-f system of a receiver.

9. *As a means of identifying an oscillating r-f mixer or i-f stage* in a receiver.

10. *As a heterodyne detector.*

11. *As a means of alignment and tracking* without rocking and *as a means of checking automatic frequency control alignment.*

In these eleven general applications of the Chanalyst will be found myriad tests which may be required during the process of trouble shooting.

THE OSCILLATOR CHANNEL

The controls associated with the Oscillator Channel are shown upon the photographic view in Figure 3 and the schematic wiring diagram is shown in Figure 1. This Channel is a single-stage, three-band tuned radio frequency amplifier, terminating in a diode detector and a Magic Eye. It operates over the frequency range from 600 kc to 15,000 kc in three bands:

Band A 600 kc to 1700 kc.
Band B 1650 kc to 4900 kc.
Band C 4800 kc to 15,000 kc.

These bands are identified upon the tuning scale engraved upon the panel and also upon the "OSC. BAND SWITCH." The input jack J2 in Figure 1 is shown in Figure 3 in the lower right hand corner of the assembly of Oscillator Channel controls, directly beneath the "OFF-ON" switch. The small pin jack located to the left of the Oscillator Channel input jack enables connection of the Electronic Voltmeter to the control grid of the Oscillator Channel Magic Eye.

The Oscillator Channel pick-up cable (brown) and probe is similar to that used for the RF-IF Channel. In general, the Oscillator Channel is like the RF-IF Channel, except that it operates over a different frequency range and is less sensitive.

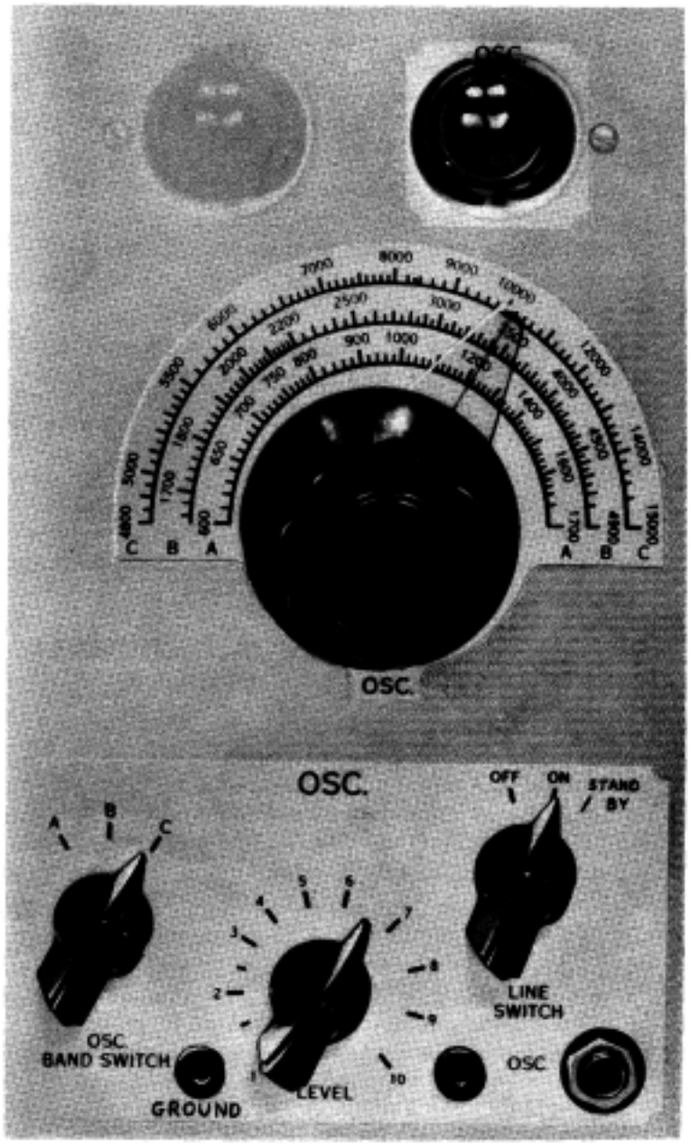

Figure 3

Since this channel is intended primarily for application in conjunction with the oscillator in the receiver, lower sensitivity is satisfactory. The operation of the indicator in this system is identical to that of the RF-IF Channel in that the Magic Eye is a reference indicator used to show the presence of the signal at the input and also to enable correct tuning to this signal. As such, it serves to check the frequency of the signal voltage applied to the input of the Channel.

THE OSCILLATOR LEVEL CONTROL—The function of the Level Control in the Oscillator Channel is primarily to enable correct tuning of the Channel with the Magic Eye as the reference indicator. By manipulation of the Level Control it is possible to reduce the gain of the Channel so that the eye does not overlap and correct resonance can be obtained between the tuned circuit in the Oscillator Channel and the frequency of the input signal voltage.

USES OF THE OSCILLATOR CHANNEL—Some of the general applications of the Oscillator Channel are listed below. Specific tests are given elsewhere.

1. *Compare signal voltage levels* from oscillators.

2. *Check the frequency of signal voltages,* as for example, the frequency of the signal voltage developed by the oscillator tube in a radio receiver.

3. *As a resonated vacuum tube voltmeter* for qualitative comparison of voltages in excess of .1 volt.

4. *As a constant monitor of the receiver oscillator output* and frequency during checking of an intermittent superheterodyne receiver.

5. *As a frequency monitor and voltage level monitor* for signals secured from a signal generator or test oscillator.

Once again we remind you that in these five general applications of the Oscillator Channel will be found all of the individual tests which are required to locate trouble in oscillating systems of radio receivers operative over the 600 kc to 15,000 kc range.

THE AUDIO FREQUENCY CHANNEL

The Audio Frequency or AF Channel is very easy to understand. Like the RF-IF and the Oscillator Channels, it is a basic network. In schematic form it is shown in Figure 1, and the location of the AF Channel controls and indicator tube (Magic Eye) upon the panel is shown in Figure 4. The "AF" indicator tube (Magic Eye) is located adjacent to and to the right of the RF-IF Magic Eye. Next to the AF Channel indicator is the "AF" level control and to the right of this level control is the multiplier. Both of these last two controls bear similar identifying names upon the schematic. The input a-f jack, shown in J3 in Figure 1, is located at the bottom of the panel and is marked "AF." The pick-up probe with cable used for this channel is shown in schematic form in Figure 1, and is a direct lead within a shielded braid.

An output jack, J6 in Figure 1 is shown connected into the input circuit of the AF Channel diode. It is located below and to the right of the meter, and is marked "AF OUTPUT." A pair of high impedance phones (such as crystal phones), an oscilloscope or another amplifier may be plugged into this jack in order to make audible, visible, or still further to amplify the signal present in the output circuit of the AF Channel. When a device is plugged into this output jack, the a-f diode and indicator are automatically disconnected.

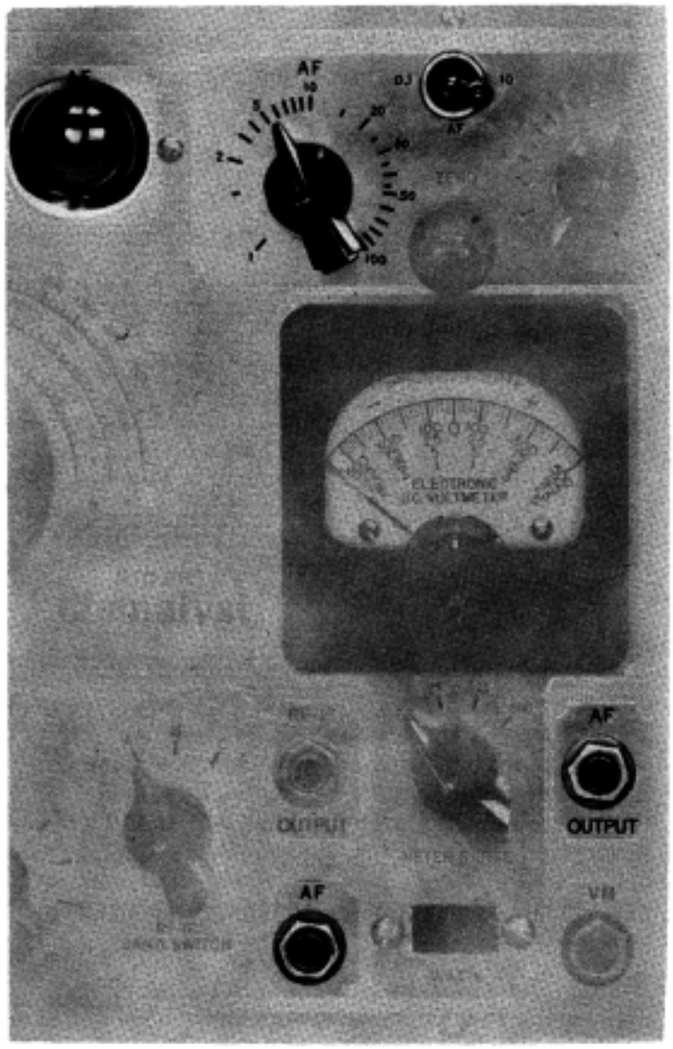

Figure 4

THE LEVEL CONTROL AND MULTIPLIER—The level control and multiplier in the AF Channel are used in conjunction with the indicator Magic Eye and can be employed to ascertain values of a-f voltage and also to compare the relative strength of two a-f voltages. . . . Once more the eye is a reference indicator. The sensitivity of the AF Channel is approximately 0.1 volt.

To determine the audio voltage at the probe tip (the green cable), the level control and multiplier are manipulated until the "eye" just closes. This is the reference setting of the a-f Magic Eye. Then the level control and multiplier readings indicate the value of this audio voltage within 15 or 20 percent.

If the multiplier is at "0.1," the audio voltage at the probe tip (the green cable) when the "eye" is just closed is equal to the number indicated by the position of the Level Control knob times 0.1. . . . If the multiplier is at "10," then the audio voltage at the a-f probe is equal to the setting of the Level Control required just to close the Magic Eye multiplied by 10.

As a means of establishing the difference between two audio voltage levels, the Magic Eye is used as the reference indicator and the two voltage values are established. The ratio between the two values is the gain or loss, depending upon the indications.

For example, if one voltage requires that the multiplier be at "0.1" and the voltage indicated by the level control setting is 5 and the second voltage requires that the multiplier be at "10" and the level control is at 2, then the two respective voltages are 0.1 x 5 or .5 for the first and 10 x 2 or 20 volts for the second and the gain is 20/.5 or 40 times.

The audio voltage calibrations apply to constant audio voltages from 150 to 50,000 cycles. The calibrations indicated upon the level control and multiplier are within 15 to 20 percent accurate. These voltage calibrations do not apply to 25 to 60 cycle a-c line voltage or to hum voltages.

This sacrifice of voltage calibrations at these low frequencies is deliberate in order to be able to distinguish hum voltages from the normal modulating voltages.

The control grid circuit of the amplifier tube is isolated from external d-c voltages, which means that the AF Channel can be used to check an audio signal any place in a radio receiving system or in an audio system where such an audio signal may exist.

The blocking condenser C29 enables application of the channel to points which carry d-c voltages not exceeding 1,000 volts. The high impedance input enables application of the AF Channel to grid as well as plate circuits in audio systems *without* loading the systems and *without interfering* with the normal operation of the amplifier system. The input impedance of the audio channel is about 2,000,000 ohms.

HOW THE AF CHANNEL IS USED—

1. *As an independent single-stage, high-gain amplifier* having flat response over the high-fidelity audio range. (The output of the RF-IF Channel can be amplified by the AF Channel.)

2. *As an independent single-stage, high-gain voltage amplifier* coupling two separate audio amplifiers, or an amplifier and another audio device.

3. *As a means of checking different audio voltage levels,* in different units or the same unit.

4. *As a means of listening to or visually observing an audio signal* present at any point in an audio system, at places where the signal is supposed to be present and at points where the signal is not supposed to be present. For visual observation an oscilloscope is necessary.

5. *As a means of checking the presence of hum* by listening or by approximating the level.

6. *As a means of checking noise* in audio systems.

THE ELECTRONIC VOLTMETER

This device is unique in every respect and like the other Channels in the Chanalyst, has no counterpart in the servicing industry. Although a single instrument, we identify it as the Voltmeter Channel because of the many functions it performs.

Unlike the other Channels, the Electronic Voltmeter does not use an electron-ray indicator tube (Magic Eye); instead it employs an amplifier tube utilized as a d-c vacuum-tube amplifier. Therefore, it is vacuum-tube voltmeter of the d-c variety and is not suitable for a-c voltage measurements.

The layout of the equipment and controls upon the panel is shown in Figure 5. The "METER

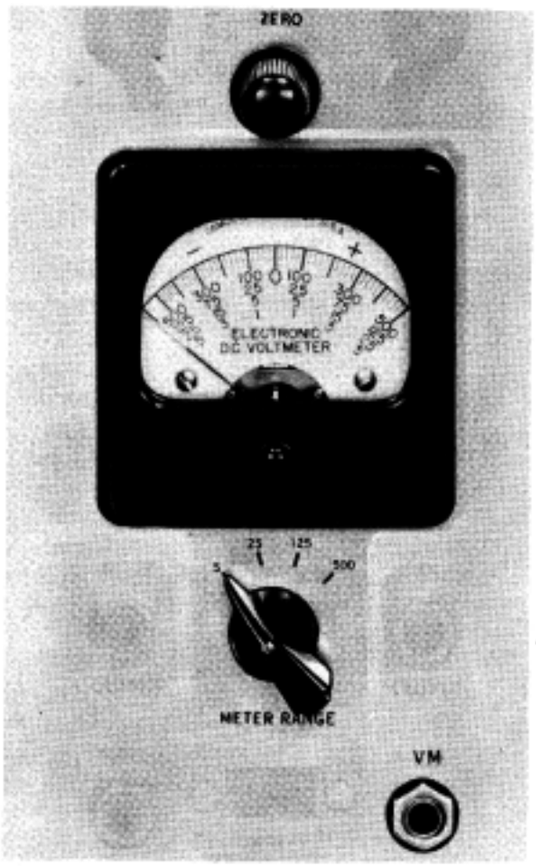

Figure 5

RANGE," "ZERO" Adjuster and the input jack are identified upon the schematic wiring diagram in Figure 1. The schematic also shows the wiring diagram of the pick-up probe and cable.

The Electronic Voltmeter will read both positive and negative voltages without any switching of leads or connections. In other words, one-half of the total scale is devoted to d-c voltages that are negative with respect to the common lead, which may be connected any place in the receiver or amplifier being checked, and the other half of the total scale is devoted to d-c voltages that are positive with respect to this free common lead. The meter is calibrated in four ranges:

−5 volts to 0 to +5 volts.
−25 volts to 0 to +25 volts.
−125 volts to 0 to +125 volts.
−500 volts to 0 to +500 volts.

All voltages ranges are available with a constant input impedance of approximately 11,000,000 ohms.

Special design features enable the Electronic Voltmeter to measure *any d-c voltage*, either operating or control, ANYWHERE IN THE SYSTEM WITHOUT INTERFERING WITH THE OPERATION OF THE RECEIVER OR AMPLIFIER AND WHILE THE SIGNAL IS PRESENT IN THE CIRCUIT. Furthermore, this voltage may be EITHER POSITIVE OR NEGATIVE with respect to ground or any selected point in the system being checked.

As a result of its extremely high input impedance, high resistances which so greatly hamper the average high-resistance voltmeter have little if any effect upon the indications obtained with the Electronic Voltmeter. The d-c voltage present in any point in the radio receiver, amplifier or device being checked can be established by simply placing the Electronic Voltmeter probe tip in contact with that point.

A brief resume of the general tests that can be made with the Electronic Voltmeter is as follows:

1. *Measure any d-c voltage* between 0 and 500 volts, plus or minus with respect to any common point.

2. *Measure rectified voltages* between 0 and 500 volts plus or minus, at the place where rectification takes place without interfering with the operation of the circuit.

3. *Measure d-c voltages at the control grid*, screen grid, cathode and plate terminals of oscillating, rectifying or amplifying vacuum tubes without interfering with the function of the tubes, with the signal present in the tube circuits.

4. *Measure leakage voltages* through various radio devices.

5. *Measure very low values of voltage* developed by sources which do not permit current drain in excess of 1 or 2 microamperes, such as bias cells or any other type of battery.

The tremendous range of operation and the speed with which all kinds of d-c voltages in a system can be checked will surprise you when you work with the Chanalyst. In the five general applications given above all the individual tests listed in a subsequent chapter are embraced.

THE WATTAGE INDICATOR CHANNEL

The Wattage Indicator Channel indicates the wattage consumption of the radio receiver, amplifier, or device being tested. It is operative upon a-c and ac-dc devices. On a-c devices, it is based upon an 80 percent power factor, which is the power factor of the power transformer under load as used in the average radio receiver.

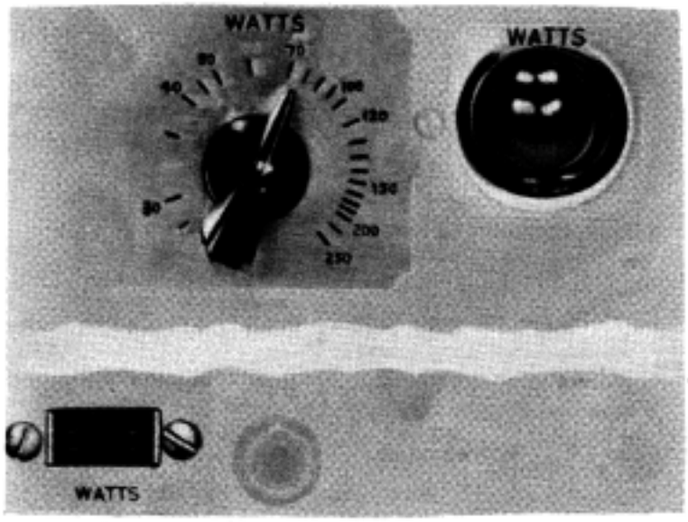

Figure 6

Referring to the schematic wiring diagram in Figure 1, the wattage indicator as well as the complete Chanalyst power supply circuit is shown.

The wattage indicator circuit consists of a current transformer, diode rectifier and a Magic Eye. The power circuit of the device under test is placed in series with the current transformer by means of the wattage indicator receptacle located at the lower center of the Chanalyst panel, marked "WATTS." The reference indicator Magic Eye is shown in Figure 6, and adjacent and to the left of this eye is the "WATTS" indicator level control. This control is calibrated in watts with respect to zero shadow angle upon the Magic Eye, that is, with the eye just closed. The power consumed by the device under test, assuming it to be an a-c device, then is indicated by the setting of the "WATTS" control when the eye just closes. This is the approximate power consumption within about 15 percent, which is a normal tolerance. The range of indications is from 30 to 250 watts. When checking devices of unity power factor, the power consumption indications are multiplied by 1.25.

The idea behind the use of the wattage indicator is that it provides an extremely rapid method of establishing power supply, short circuits and other conditions which prohibit further voltage or signal tests. When made simultaneously with a d-c voltage test, as outlined later in this text, it furnishes positive identification of the type of trouble in a "dead" receiver or amplifier or one with reduced sensitivity. The power consumption can be compared with data furnished in service notes for the respective unit. The power consumption test supplemented by the simultaneous d-c voltage test will show "opens" as well as "shorts" upon "B" supply circuits, as well as subnormal or supernormal loads upon the power supply due to discrepancies in the various tube circuits. All this can be done instantaneously and without endangering the components in the device by prolonged exposure to overloads or extremely high voltages.

GENERAL SUMMARY

The foregoing paragraphs comprise a general description of the RCA-Rider Chanalyst and describe in brief the elements comprising the various channels, the location of the respective controls on the panel and afford a general idea of what these channels will do.

All the circuits employ a single free return or "ground" which, however, is not a ground in the ordinary sense of the term. It may be connected to the chassis for signal checking or to a cathode for voltage measurement. If the return for the voltage points is the chassis, it remains at that point for all measurements. It is a "free" ground, in other words, it may be connected to whatever point is the return circuit for signal or d-c voltage measurement.

Furthermore, this ground is not connected to the primary circuit other than through the filter network C25-C26, hence the Chanalyst may be used with all receivers, provided that a-c power is available to operate the Chanalyst. The manner in which this "free" ground is used will be evident from the various descriptions of the application of the Chanalyst.

HOW TO USE THE RF-IF CHANNEL

The best way to learn to use the RCA-Rider Chanalyst is to work with each channel individually. It will be surprising how little time will be required to learn how each section of the Chanalyst operates and how each control performs its function. A good place to start is with the RF-IF Channel and a simple way is to employ the RF-IF Channel as a conventional radio receiver. Further and more elaborate tests of this character follow later in this text.

THE RF-IF CHANNEL AS A RECEIVER—To use the Chanalyst as a receiver:

1. Plug the power cable plug into a convenient a-c receptacle.

2. Turn the "ON-OFF" power switch to "ON" and wait about one-half minute. When the Chanalyst is ready for operation, the four Magic Eyes will glow and the voltmeter pointer will indicate near the center O.

3. Set the rf-if "MULTIPLIER" and "LEVEL" control to "1."

4. Plug a pair of high-impedance phones, such as the crystal type, into the "RF-IF" output jack.

5. The antenna can be the RF-IF (red) pick-up cable plugged into the RF-IF input jack. If still further pick-up is desired, the metal tip of this probe can be connected to any convenient antenna.

6. Now set the "RF-IF BAND SWITCH" to the proper frequency range as indicated upon the dial and the frequency of the station to be tuned in. Bear in mind that the frequency limits are 96 kc to 1700 kc.

7. Tune the Chanalyst so that maximum response is obtained in the headset and maximum indication is shown upon the RF-IF Magic Eye.

This is all there is to the tuning of the RF-IF Channel to any one signal frequency. However, there remain a few interesting points of discussion and further reading is necessary.

More than likely the eye will overlap when the station is tuned in, so that it may be difficult to tune accurately to the frequency of the station. To simplify tuning, all that is necessary is to reduce the sensitivity of the amplifier, by advancing the "LEVEL" control and retuning the channel. Correct resonance will be found when the eye indicates minimum shadow without overlap. As a matter of fact, using the RF-IF Channel as a receiver affords an excellent means of learning the action of the Multiplier and Level Control in connection with signal strength comparison.

STATION SIGNAL STRENGTH COMPARISON—Suppose that one station is tuned in and in order just to close the eye at correct resonance, the "MULTIPLIER" switch is at "1" and the "LEVEL" control is at "2." While it is true that the signal heard in the phones is louder when the Magic Eye is overlapped than when it is just closed, it is preferable to operate with the eye not overlapped because it assures freedom from overload and consequent distortion.

The fact that all signals heard in the phones sound alike in intensity when the channel is set for the eye just to close, does not interfere with determining the relative strength of the signals at the cable tip, or for that matter, at the input of the channel. The settings of the "MULTIPLIER" and "LEVEL" controls for the same indication upon the eye establishes the relative strength of two signals.

For example, the settings of the "MULTIPLIER" and "LEVEL" control for one station 'A" have been stated. Now another station "B" is tuned in and the eye overlaps. At correct adjustment, the eye just closed, the "MULTIPLIER" is set at 10 and the "LEVEL" control at 4.5. The product of these settings is 10 x 4.5 or 45 for the "B" station and 1 x 2 or 2 for station "A." The ratio between these two is 45/2 or 22.5, so that the signal voltage pick-up from the second station is about 22.5 times greater than the first. Another station, say "C," is tuned in and at correct adjustment with the eye just closed, the settings are "MULTIPLIER" at "1" and "LEVEL" control at "8." Thus, the signal voltage from station "C" is about four times as great as that from station "A" and is about one-sixth of that from station "B," that is, at the point of reception and with the antenna used.

In making the comparisons above, we assume that the response of the band over which the foregoing tests were made, is flat over the range. The maximum deviation that takes place in the Chanalyst is about 2:1 over the middle portion of any rf-if band, with respect to the two limits of that band, so that for ordinary comparison, this variation in internal gain is sufficiently small to justify the statement that the amplifier is substantially flat.

For further experimenting you can select a broadcast station which overlaps the eye when the "MULTIPLIER" and "LEVEL" control are set at "1" and the "Magic Eye" can be partly opened when the "LEVEL" control is advanced to "10." Note the indication upon the eye when the "MULTIPLIER" and "LEVEL" control are set at "1" and when the "LEVEL" control is advanced to "10." Now reset the "LEVEL" control to "1" and increase the "MULTIPLIER" setting from "1" to "10." Note that the indication upon the eye is approximately the same as when the "MULTIPLIER" is at "1" and the "LEVEL" control is at "10." This correct relation between the "MULTIPLIER" and "LEVEL" controls prevails when the pick-up cable connected to the input of the RF-IF Channel is the rf-if cable (red cable).

It is also interesting, during such receiver experiments or tests, to note the effect of noise upon the Magic Eye. If external noise is present, note the manner in which the "Magic Eye" flickers in accordance with the noise heard in the phones; how the two occur simultaneously. Note how easily it is possible to check a noisy carrier. When checking noise, THE MAGIC EYE SHOULD NOT BE CLOSED OR OVERLAPPED.

THE RF-IF PLUS THE AF CHANNEL AS A RECEIVER—It is possible to use the AF Channel in conjunction with the RF-IF Channel for normal radio reception. To add the channel, operate the Chanalyst as outlined with the following additions:

1. Remove the headphone plug from the RF-IF output jack and insert the plug into the AF Channel output jack.

2. Insert one plug of the Interchannel (black) cable into the RF-IF output jack and the other plug into the AF Channel input jack.

3. Operate the AF Channel level control like the conventional volume control. The AF multiplier should be set at "1."

THE RF-IF CHANNEL FOR ZERO BEAT INDICATION—The RF-IF Channel can be used as a heterodyne detector and zero beat indicator over the frequency range of 96 kc to 1700 kc. The connections are shown in Figure 7.

1. Place the Chanalyst in operation.

2. Feed the standard signal into the RF-IF Channel. If 500 microvolts or more of signal is available, you may use the regular rf-if (red) cable, otherwise, use the a-f (green) cable.

6. Adjust the level of the second signal to about half the strength of the first.

7. Now tune the second signal source accurately. As zero beat is being approached, the eye shadow will vary in accordance with the beat frequency and the meter pointer will likewise swing in accordance with the beat. The eye shadow and the meter pointer will cease varying or moving at zero beat. The accuracy with which the Chanalyst is tuned to the two signals is not very important, because the function of the Chanalyst in this case is that of a visual zero beat indicator. Adjustment can be made to exact zero beat or to a very small fraction of a cycle. Naturally, the higher the two signal frequencies, the more critical will be the tuning the signal sources, not the Chanalyst. Once the Chanalyst has been brought to approximate resonance with the standard signal, no further tuning adjustment is required unless the standard frequency is changed.

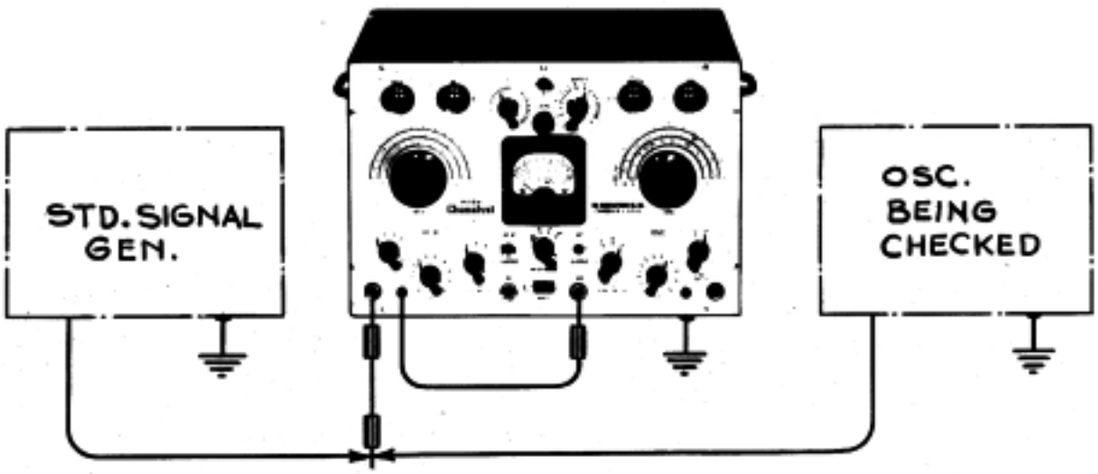

Figure 7

3. Tune the Chanalyst to correct resonance with this signal, with the "MULTIPLIER" and "LEVEL" controls set at "1."

4. Adjust the test signal output so that the RF-IF Channel Magic Eye is about half closed. Plug the voltmeter into the RF-IF pin jack, adjacent to the rf-if probe cable jack, by means of the regular voltmeter (blue) cable. The voltmeter cable plug is inserted into the voltmeter input jack and the tip of this cable probe is plugged into the "RF-IF" pin jack. Use the 5-volt range and adjust the input signal so that the voltmeter will indicate about 3 volts. This voltage will be indicated when the eye is about half closed.

5. Now feed the second signal which is to be brought to zero beat with the first to the Chanalyst by connecting the output of this signal source to the metal tip of the probe cable being used as the rf-if input.

THE RF-IF CHANNEL FOR CHECKING ANTENNA PICK-UP—Use the RF-IF Channel, as a receiver with the following additions (refer to Figure 8):

1. Adjust the voltmeter "METER RANGE" switch to the 5-volt range.

2. Adjust the "ZERO" adjusting knob so that the voltmeter pointer is at the center "0."

3. Insert the Voltmeter (blue) cable plug into the Voltmeter ("VM") input jack.

4. Insert the metal tip of the Voltmeter (blue) cable probe into the pin jack adjacent to the "RF-IF" input jack. (Without any signal input into the Chanalyst, the voltmeter will indicate between .5 to 1.0 volt. This is normal and is the contact potential developed in the diode.)

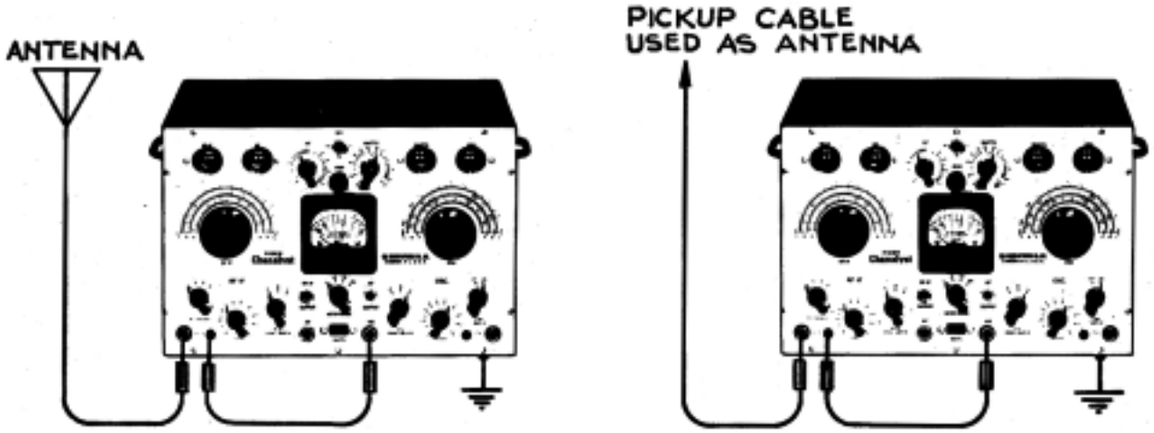

Figure 8

5. Connect the antenna to the "RF-IF" input jack by means of a phone plug or the a-f (green) cable. Set the "MULTIPLIER" and "LEVEL" controls to "1."

6. Tune the Chanalyst to resonance with the broadcast station. Note the voltage indication upon the voltmeter. On an average, every 12 microvolts of signal will cause a deflection of one volt. This may vary about 25 percent.

Based upon the above figures, full scale deflection (5 volts), upon the 5-volt scale means a signal of about 60 microvolts. Using the "LEVEL" control over its entire range increases the signal input range 10 times, so that a 5-volt indication upon the 5-volt scale and the "LEVEL" control at "10" means a signal input of 600 microvolts. Using the 25-volt scale of the volt meter increases the range of a signal voltage measurement by 5 times, so that a 25-volt indication upon the 25-volt scale and the "LEVEL" control at "10" means a signal input of 3 millivolts.

At signal levels in excess of 3 millivolts, the rf-if cable (red) should be used as a connecting link between the antenna and the input of the RF-IF Channel. This cable has an attenuation of 100 times, so that with this cable in the circuit, the range of signal measurement is increased to 0.3 volts. The MULTIPLIER, with a maximum attenuation of 1,000, may then be employed to further increase the range of signal measurement up to about 300 volts. It is best when making such tests to use the 25-volt scale whenever possible because this scale reduces the effect of the diode contact potential.

It may be pointed out here that the Chanalyst may be used to great advantage in checking automobile antennas.

THE RF-IF CHANNEL FOR CHECKING NOISE PICK-UP BY THE ANTENNA—To check noise pick-up by the antenna, use as for checking antenna pick-up with the noise as the signal. To check the entry of noise into the receiver via the aerial, connect the aerial to the Chanalyst and tune to the desired station or listen for noise. If the noise is picked up by the antenna, it will be possible to attenuate the noise by means of the rf-if "MULTIPLIER." If this control when advanced does not attentuate the noise, then the noise is not being picked up by the antenna.

THE RF-IF CHANNEL FOR ANTENAPLEX CHECKING—The RF-IF Channel as a receiver may be used effectively for checking antenaplex systems, including the distribution line and outlets. Proceed as for checking antenna pick-up. Check the antenna at the Antensifier input, then check at the Antensifier output and at various outlets of the distribution line.

THE RF-IF CHANNEL FOR CHECKING AC POWER PICK-UP—Use the RF-IF Channel as a receiver. Make contact to the "high" side of the "AC" power line with the RF-IF (red cable) probe, and listen for pick-up or noise. The Electron Voltmeter may be plugged in and used as an indicator, as described under the RF-IF Channel for Checking Antenna Pick-up.

THE RF-IF CHANNEL FOR CHECKING WIRELESS RECORD PLAYERS—Use the RF-IF Channel as a receiver. Place the rf-if (red cable) probe near the wireless record player and tune Chanalyst to the desired frequency. Then adjust the trimmer on the wireless record player for maximum output at this frequency as indicated on the "RF-IF" Magic Eye.

THE RF-IF CHANNEL FOR CHECKING CARRIER-TYPE "WIRELESS" INTER-OFFICE CALL SYSTEMS—Use the RF-IF Channel as a receiver. Make contact to one side of the power line with the RF-IF (red cable) probe, and tune the Chanalyst to the desired carrier frequency. Adjust the trimmers on the call system units for correct frequency and maximum output as indicated on the RF-IF Magic Eye.

THE RF-IF CHANNEL FOR SIGNAL TRACING—Having discussed the RF-IF Channel as a radio receiver, let us now consider its application to tracing a signal through the r-f and i-f circuits of a radio receiver. The primary purpose of this

discussion is to show how the RF-IF Channel enables us to localize defects in the radio frequency, intermediate frequency or oscillator circuits of the receiver under test. Troubles in the remaining circuits of the receiver are revealed by further tracing with other channels of the Chanalyst.

Refer to the receiver schematic diagram Figure 9. Reference to various points upon this diagram apply to equivalent points in a conventional a-c superheterodyne receiver employing an r-f stage. a combination mixer-oscillator, one i-f stage and a dual-function second detector and a.v.c. diode. This receiver normally operates over the standard broadcast band, from 540 kc to 1700 kc. Variations of this circuit embracing multi-wave-bands, automatic frequency control, t-r-f systems, triple-tuned transformer circuits, ac-dc operation, etc., will be discussed later.

For signal-tracing purposes, we should preferably use a test oscillator, capable of producing a modulated signal at some frequency in the vicinity of 600 kc. The precise frequency is not important; we wish merely to select for our tests some point in the low-frequency region of the standard broadcast band. Remembering that our RF-IF Channel is also a radio receiver, we shall choose a spot in the broacast band where no strong local station is operating, in order to avoid interference from the broadcast station while making our tests.

Assuming that 600 kc meets the above requirements, we adjust our test oscillator to supply a modulated signal of this frequency and connect it to the antenna and ground terminals of the receiver we are testing. To trace this signal through r-f and i-f circuits of the receiver, we proceed as follows:

1. Place the Chanalyst in operation.
2. Insert the rf-if (red) cable plug into the "RF IF" input jack and set the "MULTIPLIER" and "LEVEL" control knobs to "1." Then adjust the "RF-IF BAND SWITCH" to Band "B." Connect the Chanalyst ground clip to the receiver chassis.
3. Place the rf-if (red cable) probe point in contact with the antenna terminal "1" in Figure 9.
4. With the probe on "1," adjust the test oscillator output so that a strong signal is fed into the receiver. Now tune the RF-IF Channel to resonance with this signal. If the channel eye overlaps, reduce the test oscillator output until the eye just closes. This is an ideal initial reference setting, but since a few test oscillators have insufficient output to close the eye, for the purposes of this discussion, we adjust the output until the eye is about one-half closed. Note this shadow area carefully; this is our initial reference setting and will have to be duplicated.

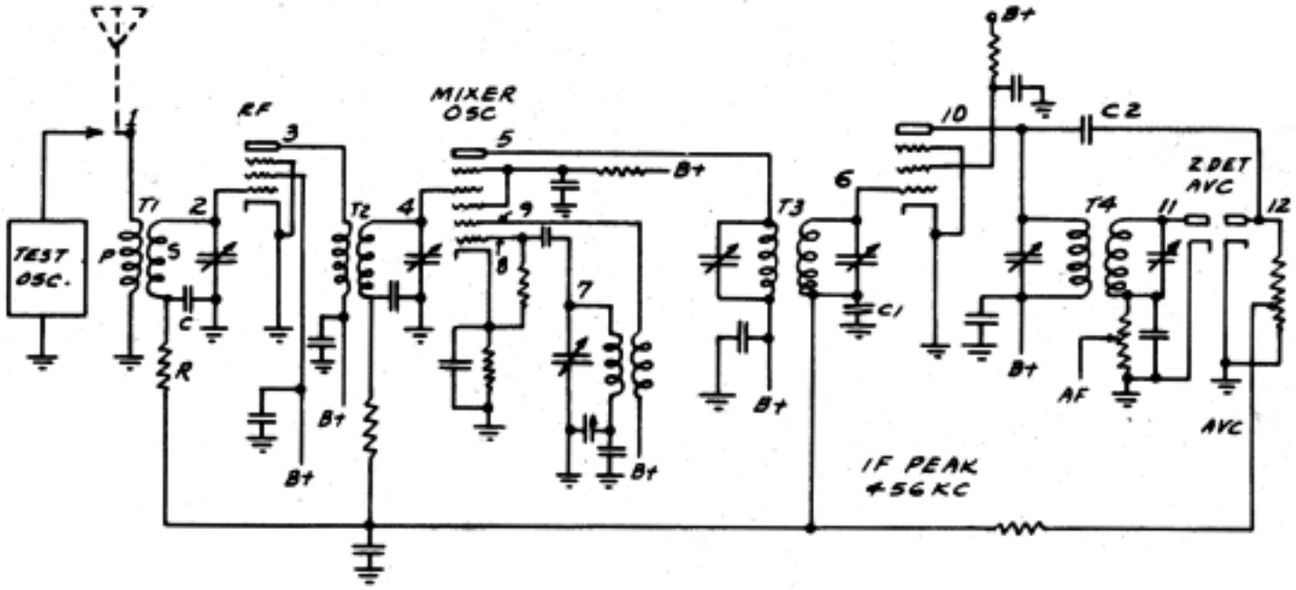

Figure 9

(Instructions given later in the text show how the Electronic Voltmeter may be used as a reference indicator; the initial indication can then be repeated without difficulty, even with much lower signal input level. Special Gain Data Instructions for RCA Victor Receivers are given on pages 47 to 50, inclusive.)

With this original reference indication established, we can check through the receiver and measure the gain or loss in signal strength at any point in the sections being tested. If the probe is moved to a point where the signal is much stronger, the eye will overlap; if the signal is weaker at such a point, the eye will open. By manipulating the "MULTIPLIER" and "LEVEL" controls, we can tell how much stronger or weaker the signal becomes as we trace it from point to point in the receiver circuits. With this information, we can determine whether or not each circuit is functioning properly.

To check the signal through the antenna transformer—We move the probe from "1" to "2," the control grid of the r-f tube. This is also the stator of the r-f section of the tuning condenser gang. Be sure that the probe point makes good electrical contact.

Normally, this antenna transformer provides an increase in signal voltage, hence we examine the indicator Magic Eye. If the increase is indicated, we check this gain in signal voltage.

To check the signal gain in the antenna transformer—With the probe tip in contact with "2," we advance the "LEVEL" control until the original channel eye reference indication is duplicated. Let us assume that, in order to restore this indication, the "LEVEL" control must be advanced to 2.5. This means that the signal gain in the antenna transformer is 2.5. (Facts relative to gain to be expected in different parts of the receiver are discussed in detail elsewhere in this instruction book.) For the moment, let us assume that this gain is normal.

Suppose that a loss or insufficient gain is indicated—When the probe is moved from "1" to "2" and the eye opens instead of closing. What conditions will cause such an indication? Improper tracking between the r-f section of the condenser gang and the remainder of the gang is one condition. Another is an open antenna coil. A short to ground across the antenna coil will not cause this effect because it will prevent any initial indication when the probe is at "1." However, the absence of a ground to the frame of the condenser, or an imperfect blocking condenser, C, may cause a loss. Shorted turns in the secondary winding or a leak across the grid and cathode of the r-f tube or socket will also cause such a condition.

If a loss is indicated in such a two-winding transformer, the normal routine is to apply other tests to check the conditions mentioned. No further signal-tracing should be done until the trouble localized in any one circuit of the receiver is cleared.

The test for tracking or alignment is given in the section devoted to "ALIGNMENT." (Incidentally, poor tracking at 600 kc is a commonplace condition, even when some gain is indicated.)

With normal signal at "2," we have a choice of checking the signal at the plate "3" of the r-f tube or advancing to the control grid of the mixer, "4." The latter is the usual move because it embraces the complete stage, whereas working between "2" and "3" covers the tube only.

To check the signal transfer from r-f grid to mixer grid—Move the probe tip to the control grid of the mixer tube "4" or to the stator of the mixer section of the tuning condenser gang. This point is joined to the mixer control grid. The Chanalyst tuning need not be changed because we are working with the original 600 kc signal. The same is true of the receiver tuning. We should find an increase in signal voltage and the eye should close or overlap.

To check the increase in signal voltage between points "2" and "4"—The "LEVEL" control is advanced. If turning the "LEVEL" control to 10 is not enough to restore the original reference indication upon the eye, the "MULTIPLIER" is brought into use. For example, let us assume that the original reference indication appears when the "MULTIPLIER" is set to 10 and the "LEVEL" control is advanced to "3." This means that the total gain from antenna "1" to mixer grid "4" is 10 x 3 or 30. You recall that the gain between antenna and r-f grid was 2.5, so that the gain between the r-f grid and the mixer grid is 30/2.5 or 12.

The signal gain noted between the r-f grid and the mixer grid takes place with the a.v.c. acting, hence this is not the maximum gain available in the system. While the a.v.c. action does not influence the antenna transformer gain, it does affect the r-f tube amplification. To establish the maximum gain without a.v.c. action, all that is necessary is to remove temporarily the a.v.c. diode from its tube socket and repeat the gain measurements. Removing this tube may interfere with the signal beyond the second detector, but that is not important when working in the r-f or i-f portions of the receiver. The gain is checked with the a.v.c. diode out of the socket and found to be 60 between antenna and mixer grid and 24 between r-f grid and mixer grid.

To check for a loss in signal between points "2" and "4"—Move the probe from "4," to the nearest preceding point where a signal should exist. This is "3," the plate of the r-f tube. Observe the indication upon the eye.

If a signal of reasonable intensity is indicated, then it is evident that the trouble is somewhere around the secondary circuit of the transformer which feeds the mixer tube. Defects are tracking, open secondary, shorted secondary winding, poor ground, open blocking condenser, open lead from condenser stator to grid, etc. Operating voltages applied to the mixer tube do not in any way influence the signal across the grid-ground circuit, unless the grid becomes positive and grid current flows through the coil. A leak between grid and cathode in the tube or the socket will tend to load the tuned circuit and thus cause a reduction in signal. As you can see, these possible troubles are very much like those listed in connection with the r-f grid circuit.

It might be well to state that the coupling transformer itself contributes little to the total gain. It does contribute a great deal in connection with the r-f tube, but not by itself. The presence of a normal signal at the plate of the r-f tube, "3" immediately eliminates the primary winding as the cause of the trouble.

Suppose that a signal does not exist at "3," the plate of the r-f tube—We know that a signal exists at the r-f grid. With no signal or insufficient signal at the plate of the same tube, it stands to reason that some operating condition within this cir-

cuit is not being fulfilled. Perhaps it may be due to some condition remotely generated, but the effect must be evident at some point in the tube circuit. Testing this tube circuit, then points the way to the cause.

The Electronic Voltmeter is used to check the various tube operating potentials, inclusive of the control grid bias, right at the control grid of the tube. (The manner in which the Electronic Voltmeter is used to check tube operating potentials is described in the operating notes covering the channel.)

With normal signal at the r-f grid, we advance to the next point of test and this is the mixer plate, "5," as shown in Figure 9. This is a very important place in the receiver because valuable information can be obtained here. Three major signals of three different frequencies are available at this point; the r-f signal, the i-f signal, and the signal produced by the local oscillator within the receiver. Not only is the presence of these signals important, but the frequency of the i-f and the oscillator signal are also very important.

To check the r-f signal at "5," the mixer plate—Move the probe from the mixer grid to the mixer plate. The matter of gain at the radio frequency is not important. As a matter of fact, a loss between "4" and "5" will generally be obtained. However, it is essential to know that the r-f signal is present at "5," to make certain that the absence of an i-f signal at "5" is not due to the absence of the r-f signal input.

There is also another function of "5" with respect to the original r-f signal; in connection with alignment. The mixer plate is the location of the rf-if probe during the alignment of the r-f and mixer tuning condensers. The need for rocking, while adjusting the oscillator padding condenser is eliminated and perfect tracking at this point is assured. This operation is described under "ALIGNMENT."

To check the i-f signal at "5" the mixer plate—With the probe at "5," tune the Chanalyst to resonance with the i-f signal. For accurate tuning, it will be necessary to manipulate the "MULTIPLIER" and "LEVEL" control knobs, so that the eye does not overlap.

Now read the frequency calibration indicated upon the dial. It should correspond with the intermediate frequency upon the schematic, namely 456 kc. As is evident, the i-f test at "5" provides the extremely valuable information about the i-f peak, for what is supposed to be correct tuning of the receiver in accordance with the dial setting. Thus, with one operation we have identified the following important facts:

a. Dial tracking
b. The i-f peak
c. Oscillator tracking
d. Oscillator frequency

If the i-f peak and the dial setting are correct, the next step is to check the i-f signal at "6," the control grid of the i-f tube. This test between the mixer grid and the i-f control grid is the "conversion gain," although as far as we are concerned in this signal tracing process, it establishes a gain in signal between "4" and "6."

As you can see, we have not checked the oscillator. If the i-f peak is correct and if the receiver dial is set at 600 kc, when we are listening to a 600-kc signal, it stands to reason that the oscillator frequency is correct. It does not mean that the level of the oscillator voltage is correct. This will not be established until we check the signal at the i-f control grid, but in the meantime, it is unnecessary to check the oscillator.

To check the i-f signal at "6," the i-f control grid—The probe is moved from "5" to "6" and with the Chanalyst already tuned to the intermediate frequency, the "MULTIPLIER" and "LEVEL" controls are adjusted to produce the original reference indication upon the eye. Examining the calibrations indicated by these knobs, we find that the total gain between antenna "1" and "6" the i-f control grid, is 300.

The gain up to the mixer grid was 30, as established in checking signal voltage between points "2" and "4," so that the conversion gain or the gain between the mixer grid and the i-f tube control grid is 300/30 or 10.

Assuming that the i-f signal at "5" is of the wrong frequency—Let us retrace some of our steps back to "5," the mixer plate. When tuning to the i-f signal, we do not find it at the expected point on the frequency scale. It may be 10, 20 or even 50 kilocycles higher or lower than the correct frequency of 456 kc. If the receiver dial is examined and found set at the 600-kc point, the frequency of the signal at the antenna, we immediately know that the oscillator in the receiver is generating a signal which is higher or lower than the correct frequency by the amount that the i-f signal at the mixer plate differs from the correct value.

This variation may or may not interfere with the passage of the signal through the receiver, depending upon the amount of discrepancy and also whether or not the i-f transformers are attuned to the frequency present at the mixer. At any rate, realignment at the correct frequency is needed, even if what appears to be normal gain exists at the i-f control grid, as described under "To check the i-f signal at '6,' the i-f control grid." The manufacturer's stated intermediate frequency should be the operating frequency.

However, it is possible that this discrepancy as noted at the mixer plate is the reason why there is no signal output from the receiver. This can be checked instantly by looking for the signal at what appears to be the wrong i-f peak at "6," the i-f control grid. If the i-f transformers are correctly tuned to the manufacturer's rated i-f peak,

no signal will be at "6," the i-f tube control grid. Then it becomes necessary to check the oscillator signal.

To check the oscillator signal—The RF-IF Channel can be used if the oscillator signal frequency is within its range. The Oscillator Channel is provided for this purpose (and some others), but since we are working with the RF-IF Channel, it is convenient to use it. The "RF-IF BAND SWITCH" is changed to Band "C." The probe is still at "5," the mixer plate, and we tune in the set oscillator signal. The "MULTIPLIER" and "LEVEL" controls are varied so as to allow accurate tuning. We now check the calibration indicated and establish the frequency of the signal developed by the receiver oscillator.

The next step is to examine the receiver dial setting. If it is correctly set at the 600-kc point, then we know that the oscillator alignment is correct. If, however, the receiver dial is not correctly set to 600-kc, which is the frequency being received, dial tracking and realignment of the oscillator are in order.

A major discrepancy may exist in i-f peak at the mixer plate—In which case it will be necessary to hunt for this i-f signal and it may be found several hundred kilocycles away from the correct value. This indicates incorrect operation of the oscillator, which can be checked as outlined and also those components which determine frequency; padder, trimmer, coil, grounds, etc. Check also for short circuits and open circuits, inclusive, of the tube, although, generally speaking, shorts or opens in the tube circuit will cause it to stop oscillating, rather than change frequency.

The oscillator can be checked at points other than the mixer plate, as for example, at "7," the stator of the oscillator section of the tuning condenser; at "8" the oscillator control grid and at "9" the oscillator plate. A full discussion of such tests upon oscillators is given in the description of the Oscillator Channel and the facts contained there apply to the RF-IF Channel, when operating over the frequency range covered by the RF-IF Channel.

Suppose the i-f signal is absent at "5," the mixer plate—The first step is to establish if the r-f signal is present in the mixer. This is done as has been outlined. If present, the next step is to check the operating potentials applied to the mixer portion of the tube elements.

To check operating potentials—The voltmeter is adjusted to the proper range by means of the "METER RANGE" switch. The voltmeter cable (blue) plug is inserted into the "VM" (voltmeter) jack. Then the voltmeter probe tip is placed in contact with whatever tube element is to be checked. (For full details concerning the application of the voltmeter, see the chapter devoted to that subject.)

If voltage is not present at any of the tube elements, that circuit is traced to find why the voltage is absent. The voltmeter can be used to isolate the defect by checking at both ends of the various current-carrying components in the circuit.

If voltage is normal at the tube elements, we then check to establish if the oscillator tube is generating the heterodyning signal. Inasmuch as it is possible that the oscillator frequency differs so greatly from the correct frequency that the i-f signal developed is beyond the frequency range of the RF-IF Channel, the first test is to check operation without regard to frequency.

To check operation of the oscillator—We place the voltmeter (the blue cable) probe in contact with the oscillator control grid. The Voltmeter should be adjusted to the 25-volt range. If the oscillator tube is oscillating, a voltage will be developed across the oscillator grid leak. This voltage will make the control grid negative with respect to ground, and the voltage may vary from about 5 to possibly 30 volts. If the oscillator is not operating, the control grid will be at zero potential, or possibly a small voltage positive with respect to ground will be indicated. It depends entirely upon the return connection of the grid leak. In the schematic shown, the control grid would be positive when the oscillator portion of the pentagrid converter is not functioning.

If we find that the tube is oscillating, the next test is for frequency.

Suppose the i-f signal is weak at "5," the mixer plate—If the control grid bias applied to the control grid of the mixer is excessive, the gain in the mixer tube will be very low and this will influence the level of the i-f signal. This control grid bias can be checked with the voltmeter.

One other possible fault that might be mentioned is excessive oscillator voltage. If this condition exists it will materially reduce the gain available in the mixer tube during the conversion process, and the signal at the mixer plate will be considerably less than normal. As a matter of fact, excessive oscillator voltage may block the operation of the mixer tube. This oscillator voltage can be checked with the voltmeter across the oscillator grid and ground. A voltage in excess of 30 or 35 volts should be investigated, particularly when the operation of the mixer tube does not appear to be normal.

Suppose there is no signal at the point "6," the i-f control grid—Having found the correct signal at the mixer plate and since we lack a signal of normal strength at the subsequent i-f control grid, it stands to reasons that the trouble must be in the i-f transformer, T3.

Furthermore, the normal signal present at the mixer plate precludes a short circuit or an open circuit in the i-f transformer primary, hence the trouble is localized as being in the i-f transformer and can be due to misalignment of either the primary or secondary circuits, or both, defective trimmers, a defective secondary winding, etc.

It may be well to mention that one way of determining if the i-f transformer trimmers are operative is to keep the probe in contact with "6" and to vary the trimmers.

The i-f tube is coupled to the second detector diode plate "11" and, assuming normal signal at the i-f control grid, the next test is for the transfer of the i-f signal from "6" to "11." We can, if we wish, check the signal voltage at "10," the plate of the i-f tube, but we save time by advancing to the diode plate.

To check the signal at the diode plate "11"—The probe (red cable) is moved from "6" to "11." The Chanalyst is resonated to the i-f signal and the "MULTIPLIER" and "LEVEL" controls are adjusted so that the original reference indication appears upon the eye. This indication appears when the "MULTIPLIER" is at 1,000 and the "LEVEL" control is at 9.5, which means that the total gain between antenna and diode plate is 9500.

If you remember, the total gain up to the i-f control grid (operation 14) was 300. Therefore, the gain between the i-f control grid and the detector diode plate is 9500/300 or about 32.

It is possible that manipulation of the "MULTIPLIER" and "LEVEL" controls will not restore the indication upon the eye to the original reference value. In other words, the gain in the receiver from antenna to detector diode plate is in excess of 10,000. If you desire to establish the signal gain between the i-f control grid and the detector diode plate under such conditions, a new reference value is set at the i-f control grid, "6" and when the probe is moved to "11," the "MULTIPLIER" and "LEVEL" controls are adjusted to restore the indication upon the Magic Eye to the value established when the probe was at "6," the i-f tube control grid.

As a matter of information, the signal gain between the control grid of an i-f tube and the detector diode plate which that i-f tube feeds, is less than the gain between the i-f tube control grid and the plate of the same tube. In other words, a loss takes place between the plate of the i-f tube and the subsequent detector diode plate. The loss in this diode input transformer may vary from about 1.5 to 1 to about 3 to 1.

Suppose the i-f signal is missing at "11," the diode plate—The probe (red cable) would be moved from "11" to "10," the i-f tube plate. If a normal signal appeared at this point, it would localize the trouble as being in the i-f transformer, T4, and the associated circuits. If no signal is at "10," the i-f tube is not normal; then the tube operating voltages are checked, including the a.v.c. voltage applied to the control grid and the d-c continuity of the grid circuit of the i-f tube.

To check the loss in the diode input transformer—The (red cable) probe is placed in contact with "6," the i-f tube control grid, and a reference indication upon the eye is established. Then the signal gain between "6" and "11" is checked and also the total gain between "6" and "10." The ratio between the latter and the former is the loss in the coupling transformer. Suppose that between "6" and "11," the gain is 32 and between "6" and "10" the gain is 64. The ratio 64/32 or 2 is the loss in the transformer.

THE A.V.C. DIODE SIGNAL—If you examine the schematic in Figure 9, you will note that a condenser is connected between the plate of the second i-f tube and a diode plate (point "12"). This is the a.v.c. diode plate. In some instances, this diode is joined to the detector diode and the detector and a.v.c. functions are performed by the same diodes. In this case, however, individual diode plates are used.

In order that the a.v.c. function, it is necessary that this a.v.c. diode plate receive a signal voltage from the i-f tube and this signal voltage is transferred to the diode plate through the condenser C2.

To check the i-f signal at the a.v.c. diode plate—The (red cable) probe is moved to the a.v.c. diode plate, "12." Inasmuch as C2 usually is a small value capacity, it may be necessary to adjust the attenuators so as to increase the sensitivity of the RF-IF Channel in order to check this voltage. In this connection, the exact value of voltage upon the diode plate is not the paramount item. Of greatest significance is the test to establish if the i-f signal voltage is present at the a.v.c. diode plate in order to actuate this circuit, particularly when some defect appears to exist in the a.v.c. system.

USING HEADPHONES IN SIGNAL TRACING—Up to this time, we have not spoken of the use of headphones in connection with signal tracing. However, you no doubt remember references to the fact that a jack is provided in the output circuit of the RF-IF Channel and the purpose of this jack is to allow the use of headphones so that it is possible to listen to the modulated signal voltage existing at the point where the rf-if pick-up cable probe tip is in contact with the circuit under test.

Although this headphone arrangement is provided primarily for distortion checking when an oscilloscope is not available, it is possible to trace the signal through a system by listening, just as well as by watching the Magic Eye.

With headphones plugged into the "RF-IF" output jack and the (red cable) probe moved through the various points outlined in connection with Figure 9, we can listen to this signal any place along the line where the modulated signal exists. The headphones required for this purpose are a pair of high impedance phones such as the crystal type.

It should be understood that the use of these phones does not in any way change the progress of signal tracing as previously outlined. The use of these phones in connection with signal tracing to locate the source of distortion is described under the heading of "DISTORTION TRACING,"

When listening to a signal any place in the r-f or i-f system, the signal heard is the rectified carrier voltage present at the place where the probe tip is in contact with the receiver. Naturally, the carrier must be modulated.

TUNED RADIO FREQUENCY RECEIVERS—Signal tracing in tuned radio frequency receivers does not differ from that explained in connection with the superheterodyne shown in Figure 9. Since frequency conversion does not take place in a t-r-f receiver, the signal checked between the antenna and the detector tube is of the frequency fed into the receiver at the antenna. In other words, the entire tuned radio frequency portion, inclusive of the detector, is treated exactly as the radio frequency portion of a superheterodyne.

SUPERHETERODYNES WITH A.F.C.—The presence of automatic frequency control in a superheterodyne does not complicate the process of signal tracing. Every superheterodyne equipped with a.f.c. becomes a conventional superheterodyne receiver when the a.f.c. switch is set to cut the a.f.c. system out of the circuit.

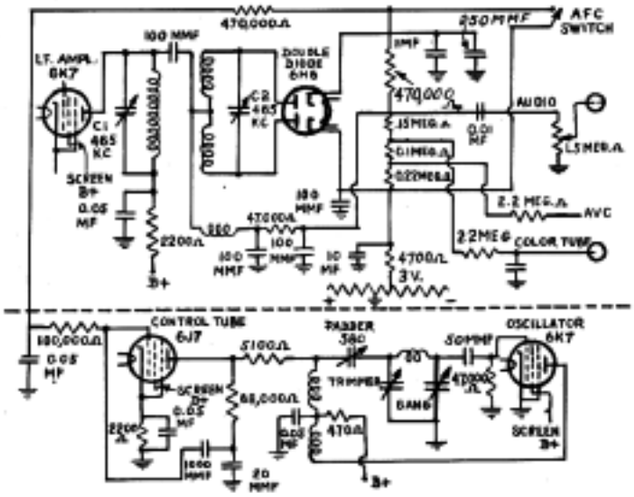

Figure 10

When the a.f.c. system is in the circuit, several additional points of test are added. For example, Figure 10 shows a conventional a.f.c. system. The complete superheterodyne circuit need not be shown.

Referring to the schematic, we note the plate circuit of the i-f tube, the discriminator transformer, the discriminator tube, which also serves as the source of a.v.c. and the rectified audio voltage, the control tube and the oscillator, which also is the mixer tube.

The oscillator signal at frequencies up to 1700 kc can be checked in the conventional manner as previously outlined. The frequency can be checked with the a.f.c. switch "ON" and 'OFF" in order to note the effect of the a.f.c. system. These signals also can be checked at the control tube grid and plate. At the higher frequencies, the arrangement shown in Figures 11 and 12 is used. The oscillator channel probe is placed near, but not in contact with the tuning condenser contact which joins the tuning condenser or trimmer to the control grid. Thus, all reaction at even the highest frequency within the range of the Chanalyst is avoided. The same is true when the control grid and plate contacts of the oscillator are accessible at the bottom of the tube socket. See Figure 11.

Application of the control grid bias, fixed, or variable as supplied from the discriminator tube is checked by means of the Electronic Voltmeter and this operation is described under that caption.

The i-f signal fed into the discriminator tube can be checked by alternately placing the (red cable) probe in contact with the two diode plates. The voltage fed to the discriminator transformer through the condenser can be checked by placing the probe with the lead that joins the condenser on the secondary side.

The output bias voltage developed by the discriminator tube and applied to the a.f.c. control tube can be checked by means of the Electronic Voltmeter and is discussed elsewhere in this instruction book.

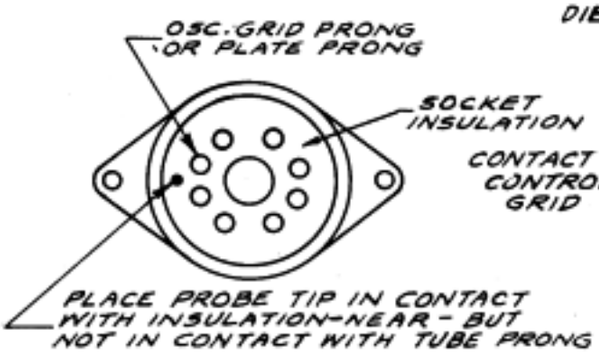

Figure 11

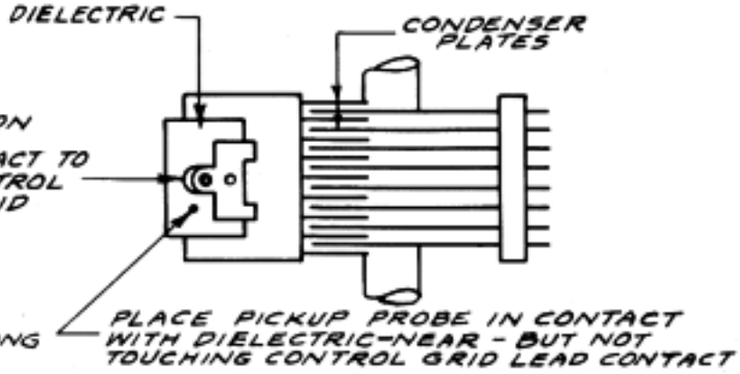

Figure 12

Another type of a.f.c. system wherein a three winding i-f transformer is used with one winding feeding a separate a.f.c.-i-f amplifier tube is shown in Figure 13. These additions do not complicate matters. All they do is add several other points where the i-f signal is checked. One of these points is the high side of the tertiary (third) winding which feeds the control grid of the a.f.c.-i-f amplifier tube. The second point is the control grid of this tube and the third is the plate circuit of this amplifier tube.

The process of signal tracing does not change. This is shown in the accompanying block diagram. See Figure 14. Note that one portion of the receiver is variable tuned and that the remainder is fixed tuned. The process of signal tracing, exclusive of the a.f.c. circuit, which is covered separately is as follows:

1. The 650-kc signal is fed in at the antenna.

2. This signal, the oscillator signal in the variable tuned section and the i-f signal out of the

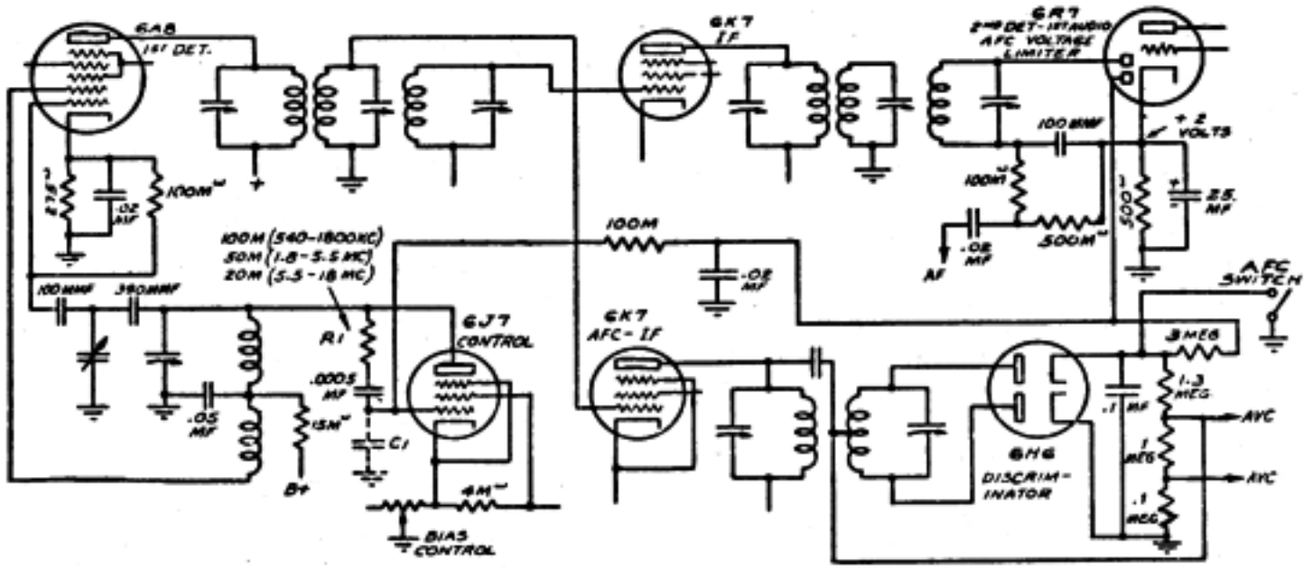

Figure 13

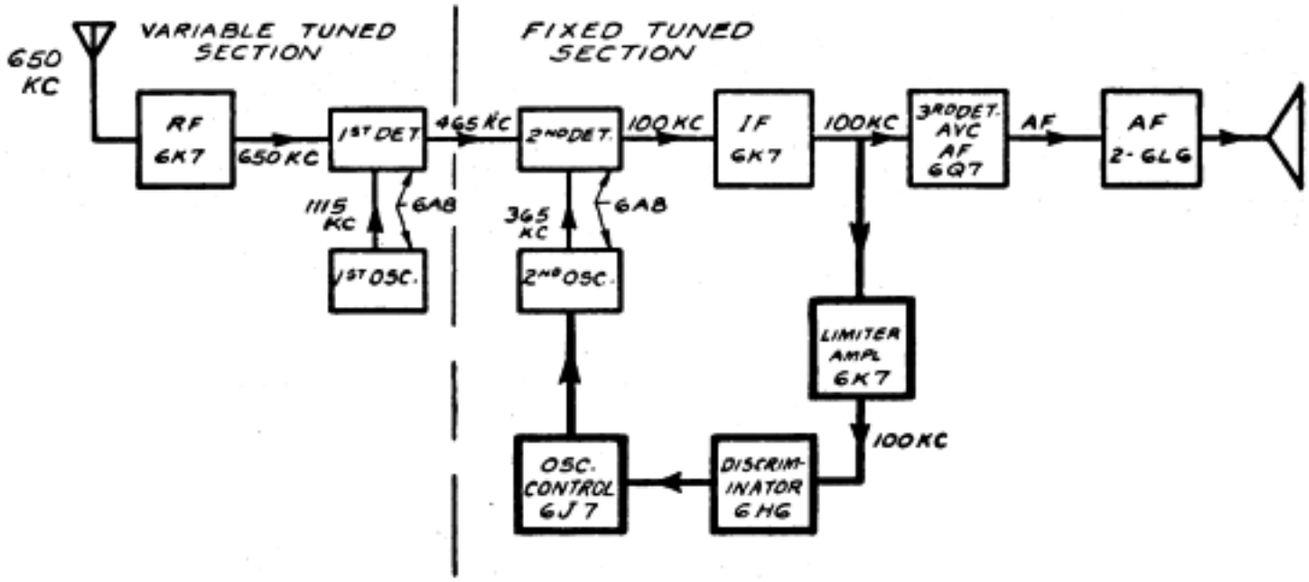

Figure 14

DOUBLE SUPERHETERODYNES—This type receiver appeared some time ago, and while it appears more complicated, is not as far as signal tracing is concerned. The primary difference between this circuit and the conventional is that the superheterodyne principle is applied twice. This means that two oscillators operating at different frequency are employed and the same is true of the intermediate frequency amplifiers.

first detector are traced with the Chanalyst in the conventional manner as outlined earlier in this chapter.

3. The i-f signal from the first detector then is fed into the second detector which also is a mixer operating with a second oscillator; hence the signal voltages at the new frequencies are checked with the Chanalyst.

4. The i-f signal out of this second detector or second mixer then follows in conventional manner into the third detector, which is the normal demodulator.

Thus it is a matter of checking signals at more frequencies than would be found in the conventional superheterodyne. Further, the fixed tuned section tube elements are accessible in exactly the same manner as in the conventional receiver. The a.f.c. system operates upon but one oscillator.

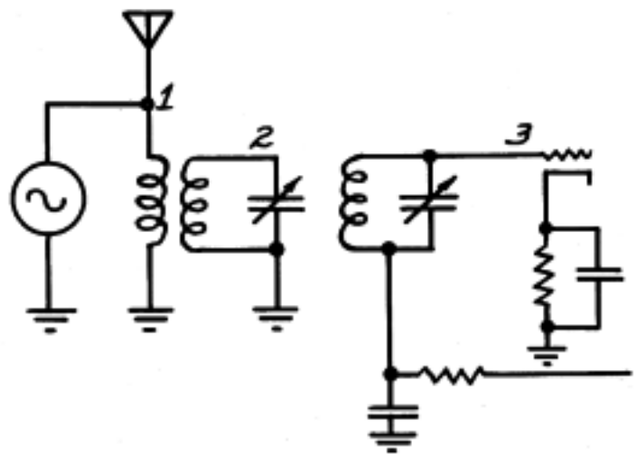

Figure 15

THREE CIRCUIT R-F TRANSFORMERS—Some receivers are equipped with three winding dual tuned r-f transformers, usually between the antenna and the mixer tube, as shown in Figure 15. The first winding is in the antenna system, the second winding is a link circuit to provide additional selectivity and the third winding, tuned like the second, feeds the mixer tube.

The process of tracing a signal through such a circuit is slightly different in that with the test oscillator connected across the antenna and ground, the maximum signal will appear across the link circuit. In other words, maximum increase in signal voltage will be noted between "1" and "2." The probe located at "3" will show a lower voltage than at "2," but added selectivity is obtained.

The probe location at "2" is the stator of the tuning condenser which tunes this link. The ground connection of the Chanalyst is connected to whichever portion of the receiver is the ground junction of the tuning condensers and the antenna system.

While as a rule, the signal voltage at "3" is less than at "2," this difference should not be extremely great. Incorrect tracking can be established by first checking the voltage at "2" and then advancing to "3." If maximum signal levels at "2" and "3" do not exist at the same setting of the gang condenser, it indicates poor tracking.

THREE CIRCUIT I-F TRANSFORMERS—As a general rule, there are two types of three winding transformers. In one type the third winding, operated in conjunction with a variable resistance, serves to vary the selectivity characteristics of the complete transformer. In the second type, the third winding serves to feed an i-f signal voltage into some special circuit, whereas the regular primary and secondary windings function as a conventional i-f transformer.

The first type is shown in Figure 16. As far as signal tracing is concerned, the signal across the primary and secondary is checked in normal manner, with the third winding resistance at maximum so that it has minimum effect upon the primary and secondary windings. The presence of this third winding can be checked by noting its effect upon the signal voltage at the grid end of the secondary winding with the variable resistance (selectivity control) in different positions. The less the resistance in this tertiary (third)

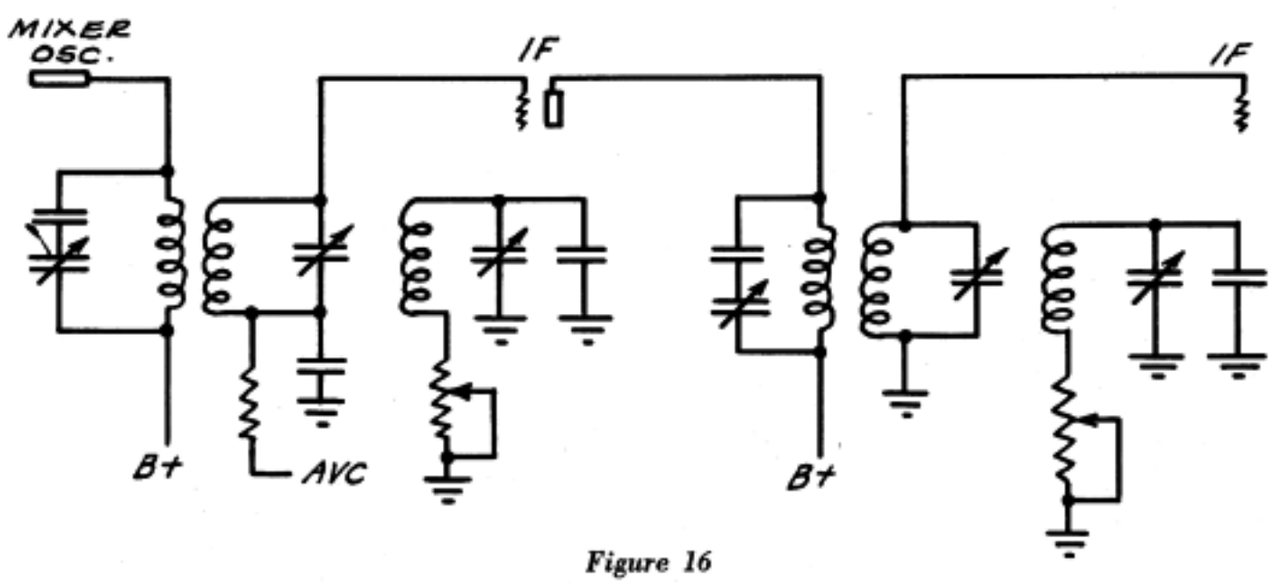

Figure 16

winding, the lower the signal voltage at the intermediate frequency at the grid end of the secondary winding. The reason for this is that decreasing the tertiary winding resistance broadens the response of the transformer and produces a hollow at the intermediate frequency in the response curve and peaks both sides of this frequency.

An absence of this effect, with normal operation otherwise, indicates a defect in the third winding. Since the various resistances associated with the i-f transformers in such a receiver are linked to one control, it is advantageous to be able to determine the condition of these windings.

Another method of checking these tertiary windings, which does not change the normal signal tracing process, is to check the increase in signal voltage at the "high" end of this transformer while the selectivity control is varied from "maximum selectivity" to "high fidelity." This is done as a regular operation during the time that the signal tracing operation is being applied to the i-f amplifier. The probe (red cable) is placed in contact with the "high" end of these tertiary windings.

The second type of three winding i-f transformer is shown in Figure 17. Here the third winding is employed to feed a signal voltage (at the intermediate frequency) to a rectifier, which in turn develops a bias for a tuning indicator. In the event of trouble in the tuning indicator circuit, the first step is to check the signal voltage developed across this transformer by connecting the rf-if probe (red cable) to the "high" side of this winding and tuning the Chanalyst to the correct intermediate frequency, just as if it were the secondary winding of the i-f transformer.

Then the presence of the signal voltage upon the tuning indicator rectifier diode plate is checked in conventional manner by moving the Chanalyst probe (red cable) from the i-f transformer, "1," to the diode plate, "2." As you can easily see, this winding becomes just another winding that is checked for a signal and the absence of signal at either "1" or "2" calls for investigation of the possible reasons.

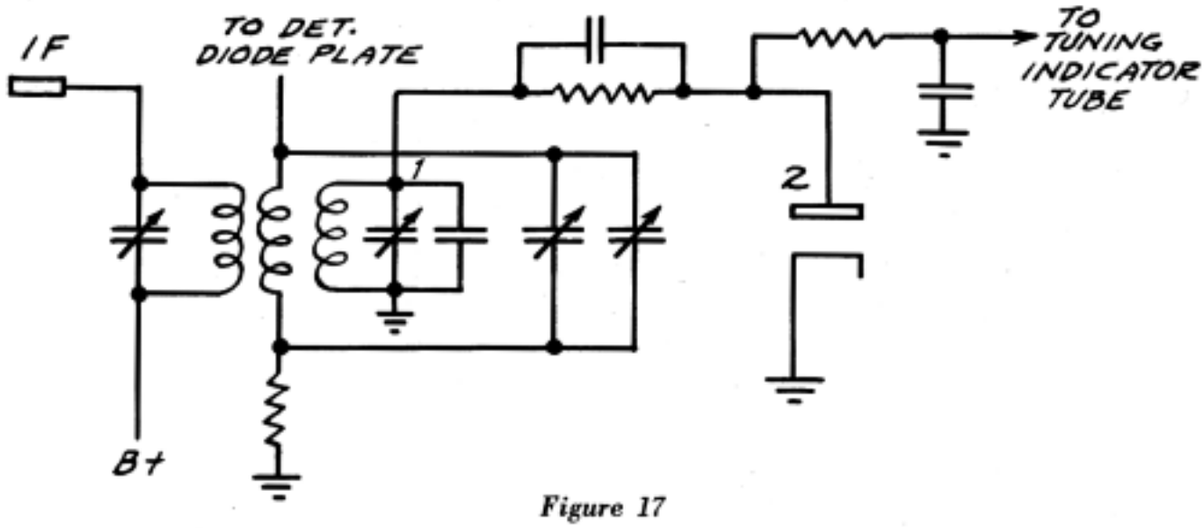

Figure 17

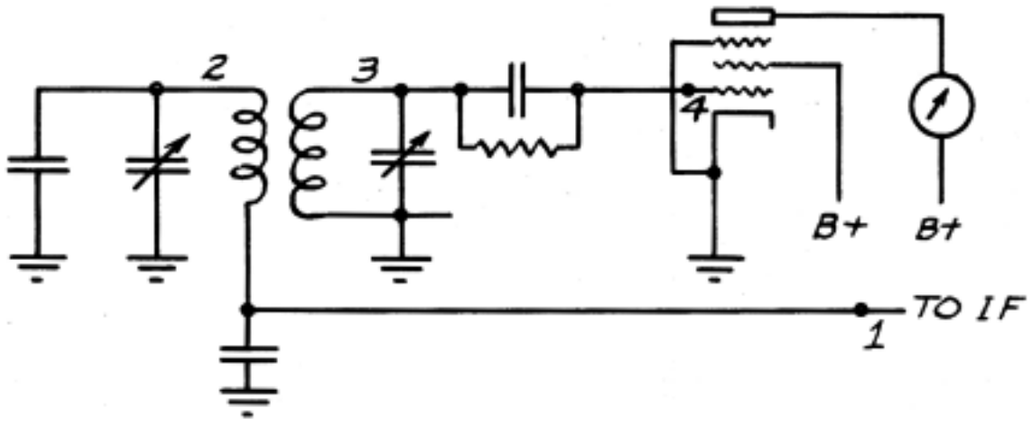

Figure 18

TUNING INDICATOR TRANSFORMER SYSTEMS—Tuning indicator systems are checked in a manner similar to that described in connection with triple tuned i-f transformer, which has a tuning indicator winding. The usual run of two winding tuning indicator transformers are operated at the intermediate frequency and secure their initial signal from some portion of the i-f circuit. The secondary of this transformer feeds the voltage to a tube which acts as a detector or

rectifier and the plate current variations cause changes in the tuning meter indication. See Figure 18.

The signal fed into these transformers and the signal fed from the transformer to the rectifier tube and the state of alignment is checked exactly as if it were another i-f transformer feeding an amplifier tube. With the signal fed into the antenna in conventional manner, the i-f signal fed into the tuning indicator circuit is checked by means of the rf-if probe (red cable) and the Chanalyst tuned to the intermediate frequency. This signal test is made right from the source of the i-f signal to the control grid of the tube as shown by "1," "2," "3," and "4." The remainder of the circuit, that relating to operating voltages, is checked by means of the Electronic Voltmeter.

SEPARATE A.V.C. TUBE SYSTEMS—The system which employs a separate tube to develop the a.v.c. voltage is treated exactly as if it were the a.v.c. diode in Figure 9. The signal voltage is traced from the i-f transformer which is the source, right to the control grid or whichever terminals of this tube receive this i-f voltage by moving the rf-if probe (red cable) along this feed wire and making contact with its junctions. The Chanalyst is tuned to the intermediate frequency of the receiver and the test signal is fed into the receiver at the antenna.

"Q" OR NOISE SUPPRESSION CIRCUITS—A number of "Q" circuits operate upon the i-f amplifier and secure the initial actuating voltage from the intermediate frequency amplifier, so that tracing of the signal fed into the control circuit is done in accordance with the normal routine used to check an i-f signal any place in the i-f or associated system. Whatever other operating voltages are associated with such circuits are checked with the Electronic Voltmeter.

MULTI-WAVEBAND RECEIVERS — Multi-waveband receivers are checked for signal passage through the system in conventional manner, except for one difference. This is that the r-f portion of the receiver inclusive of the mixer input transformer is checked at broadcast frequencies. The oscillator section of the receiver is tested at whatever frequency may be required, beginning at 600 kc and up to 14,000 kc.

The reason for this is that if the receiver operates upon the broadcast band and does not operate upon the short wave band, and it is possible to check the oscillator system upon the short wave band and establish its normal operation, then the difficulty is immediately identified as being in the r-f portion of the radio receiver.

Another exception to this rule applies to receivers which have a "weather" band of from 140 kc to about 400 kc. Such receivers may be checked over this band as well as the broadcast band, by using the RF-IF Channel for all signal tests.

The manner of checking high frequency oscillator circuits in multi-waveband receivers is described in the chapter devoted to the Oscillator Channel.

Use of the RCA UHF Converter (Stock No. 164) extends the applications and advantages of the RCA-Rider Chanalyst to 80 megacycles.

TESTING WITH AN OSCILLOSCOPE—The usual application of the oscilloscope in connection with the Chanalyst is for distortion checking. This operation is described in full detail under the heading of "DISTORTION TRACING."

USING THE VOLTMETER FOR SIGNAL TRACING—The Electronic Voltmeter can be used as an indicator when tracing a signal through a receiver.

The voltmeter is plugged into the rf-if pin-jack, just as used for checking antenna pick-up or station signal comparison. Then the test oscillator output is adjusted so as to produce an indication of about 1.5 volts on the 5-volt scale. The voltmeter then becomes the reference indicator and is used throughout the test as such, with 1.5 volts on the 5-volt scale as the reference setting or indication.

AC-DC RECEIVERS—When working with ac-dc receivers, the Chanalyst free ground should be connected to the frame of the tuning condenser gang for signal tests, if that point is the return for the signal circuits.

The return for operating voltage tests is discussed in connection with the Electronic Voltmeter.

The remainder of the operations during signal tracing or voltage measurements is exactly as outlined.

BATTERY OPERATED RECEIVERS—Battery operated receivers are checked exactly as a-c receivers. Since the chassis is generally the ground point, when tracing signals the Chanalyst ground must be connected to the chassis.

THE RF-IF CHANNEL AS A TUNING INDICATOR—In some cases, the receiver being tested may be wholly inoperative and some means is necessary to know when the receiver is tuned to the signal output of the test oscillator. The RF-IF Channel can be used as the tuning indicator by resonating the Chanalyst to the test oscillator frequency and placing the probe tip on the control grid on the tube nearest the antenna and tuning the receiver until maximum signal voltage is indicated upon the Chanalyst Magic Eye. This at least is a good starting point when working upon such receivers.

TESTING OSCILLATING RECEIVERS—After the usual service procedure of testing tubes, cleaning and tightening gang-condenser rotor wipers, and checking the cathode bias of r-f tubes in receivers without a.v.c. the signal generator should be connected to the input terminals of the receiver (if a signal is required to produce oscillation). Testing should be done under the same conditions present when the trouble is noted. If

the receiver oscillates over one portion of the band but not at another, test at the frequency where oscillation occurs. In some cases, the loading effect of the signal generator will stop oscillation in the antenna stage. A small blocking condenser or dummy antenna will overcome this effect and permit testing to continue. If the receiver oscillates with no signal, then none is required for our tests.

The usual procedure described under "SIGNAL TRACING" should be used to localize the cause of oscillation. Oscillation in the i-f stage will usually be indicated by a strong i-f signal on the RF-IF Channel Magic Eye with no signal fed into the receiver. Oscillation of the i-f stage will also produce a high a.v.c. voltage which can be measured with the Electronic Voltmeter Channel (blue cable) probe.

Oscillation in the r-f stage will be indicated by a strong r-f signal on the RF-IF Channel Magic Eye, with no signal fed into the receiver. The frequency of the r-f oscillation will depend on the dial setting of the receiver.

THE RF-IF CHANNEL FOR DISTORTION TRACING—In the preceding discussion, our primary concern has been to check the signal level throughout the r-f and i-f portions of the receiver. We have not considered the CHARACTER of the signal which we are checking. It is possible that some condition is present in these sections of the receiver which affects the fidelity of the signal, but not the signal level. If such distortion is introduced, it will not be registered on the channel Magic Eye. However, both the RF-IF and AF Channels are provided with output jacks, as described in the Introduction, so that a cathode-ray oscilloscope or headphones may be plugged in and the distortion noted visually or aurally. The Chanalyst probe system of testing removes the difficulties formerly encountered in attempting to connect the oscilloscope across tuned circuits and thus enables the signal to be studied without retuning or otherwise disturbing the circuit under test.

Let us first consider the application of the RF-IF Channel and the oscilloscope to distortion tracing in the receiver. We shall require a test oscillator producing a modulated signal, preferably free from distortion (though even a distorted signal may be used). The receiver is set up in the same manner already described for signal tracing. Instead of checking the signal level at each point in our signal-tracing procedure, we examine the wave form of the signal at each point on which the rf-if probe (red cable) is placed. This wave form is compared with an initial reference image, representing that of the signal at the receiver input. Should the two wave forms differ, some receiver circuit is adding distortion. Components affecting the operation of the receiver, at the point in the normal signal path where distortion is first noted, are then checked until the trouble is located.

For example, let us assume that we are still set up to follow the signal-tracing procedure described before. The test oscillator is feeding a 600-kc modulated signal to the receiver input, and the RF-IF Channel as well as the receiver has been tuned to this signal. Our first step in distortion tracing is to obtain our initial reference wave form. To do this, we proceed as follows:

1. To connect the oscilloscope to the RF-IF Channel output jack by means of a plug and shielded cable.

2. Place the rf-if probe (red cable) on "1," in Figure 9.

3. Adjust the test oscillator output until a strong signal is indicated on the channel eye when the "LEVEL" and "MULTIPLIER" controls are both set at "1."

4. With the oscilloscope in operation, adjust its vertical amplifier gain control until a wave of convenient height appears.

5. Now adjust the oscilloscope horizontal sweep until the wave is synchronized. Note the wave shape; this is our initial reference wave form.

We can now check the signal wave form at any point in the r-f or i-f system. To save time, it is convenient to test first at readily accessible points, such as the control grids of each tube in the r-f, mixer, and i-f sections. These are indicated on Figure 9 as "2," "4," and "6." At each of these points, the signal should become progressively stronger. The image on the oscilloscope will correspondingly increase in height. DO NOT change the oscilloscope amplifier adjustments; maintain an image of constant height by adjusting the RF - IF channel "MULTIPLIER" and "LEVEL" controls. This is done to avoid overloading the RF-IF Channel. However, no detectable distortion will occur in the RF-IF Channel even with a 1-volt signal at the probe point or 10 millivolts at the "RF-IF" input jack.

In checking for distortion, it is well to maintain a fairly strong input signal to the receiver. Often distortion is caused by defective a.v.c. action and this condition will not be evident on weak signals. A good input signal is that just sufficient to close the RF-IF Channel Magic Eye when the probe is on "1." This is approximately 7 millivolts.

6. To proceed with our testing, place the rf-if probe (red cable) on "2." After adjusting the oscilloscope image height, examine it to see if the wave form is perceptibly different from the original wave form. If regeneration is present, the wave form will be affected. Other conditions can likewise affect the wave form at this point. Checking a.v.c. voltage, tube voltages, wiring, and components affecting the operation of this stage will reveal the cause.

It is unnecessary to analyze in detail the possible troubles which may cause distortion at each of the remaining test points; this has already been

done in regard to signal-tracing. The essential difference between signal tracing and distortion tracing by this method is that in the former case, we compare the signal level at the point tested with an original reference signal level, while, in the latter case, we compare the signal wave shape at the point tested with an original reference wave shape.

An example of the type of defect readily shown by this test procedure is given in the oscillograms reproduced on this page. Defective a.v.c. action due to condenser leakage causes the last i-f stage to become overloaded. The reference wave form (Figure 19) is seen to be substantially a pure sine wave, while the wave forms due to overloading (Figures 20 and 21) are badly distorted. Figure 20 shows the distortion when the internal resistance of the condenser drops to 1 megohm and Figure 21 shows the effect when the internal resistance is 0.1 megohm. This effect would be revealed by placing the rf-if probe (red cable) at "10," Figure 9, the plate of the last i-f tube (also by checking the a.v.c. voltage on each side of the time-delay resistor to determine that there is no drop across it due to leakage current). Misalignment of the i-f stages produces similar effects.

low-frequency end of the standard broadcast band should be tuned in. The headphone should be of the crystal, or similar high-impedance, type. Such phones may be directly plugged in the rf-if channel output jack. Low impedance magnetic phones likewise may be used provided a suitable matching transformer is employed. A line-to-grid type, with the line winding connecting to the phones and the grid winding to the Chanalyst jack, will be satisfactory provided there is a reasonably good match of the line winding to the impedance of the phones.

Our original reference signal is obtained by placing the rf-if probe directly on the antenna post of the receiver. With the antenna connected, the broadcast station is then tuned in on the Chanalyst. The signal will be clear and undistorted in the headphones. If the volume is not as great as desired, the AF Channel can be connected to the RF-IF Channel to provide additional amplification, as shown in Figure 22. This is done by using the shielded interchannel cable supplied. Insert the plug at one end of this cable in the RF-IF Channel output jack in place of the phones. Then insert the other plug in the AF

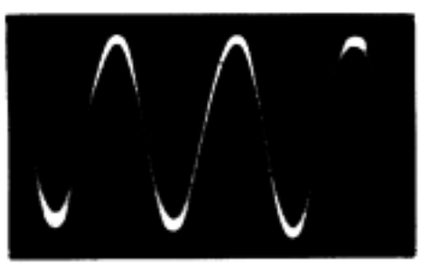

Figure 19

Figure 20

Figure 21

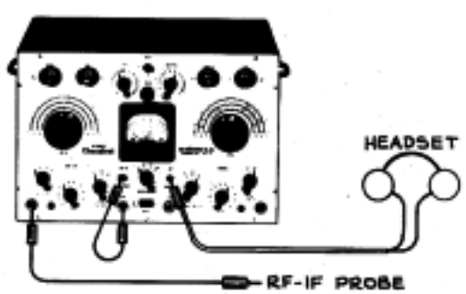

Figure 22

DISTORTION TRACING WITH HEADPHONES—The procedure for tracing distortion using headphones in place of the oscilloscope follows substantially that outlined above, with two important differences. The signal is traced in the same manner, but it will be found difficult to distinguish slight distortion which is immediately evident on the oscilloscope.

Testing with headphones is facilitated by employing a broadcast signal, rather than a test oscillator, for our reference signal. Accordingly, an antenna and ground should be connected to the receiver and a strong, local station near the

Channel input jack. The headphones are now plugged in the AF Channel output jack. The signal level to the headphones may then be controlled either by the "AF" level control or those of the RF-IF Channel. It is preferable to use the latter, to avoid overloading the RF-IF Channel. Note that the AF Channel Magic Eye will be inoperative when its output jack is in use.

Testing procedure follows the usual signal-tracing order. The character of the signal at the point on which the rf-if probe (red cable) is placed is compared with that at the antenna post simply by replacing the probe point on the antenna post,

from time to time, and re-adjusting the controls of the RF-IF Channel to keep a constant signal level.

Tracing distortion in the a-f system is covered in the chapter devoted to the application of the AF Channel.

DISTORTION TRACING WITH LOUDSPEAKER—The output stage and loudspeaker of an a-c radio receiver may easily be connected to the output jack of the AF Channel for use in tracing distortion. It may be used for tracing distortion in the a-f system, by using the a-f (green cable) probe, or in the rf-if system by using the rf-if (red cable) probe and connecting the RF-IF Channel output jack to the AF Channel input jack as shown in Figure 22A.

plug in the AF Channel output jack. Connect the other end of the cable to the control grid of the output tube in the a-c radio receiver. Connect the shield of the cable to the receiver chassis.

Use the shielded interchannel (black) cable to connect the RF-IF Channel output jack to the AF Channel input jack.

If the receiver that is being used has a push-pull output stage, connect the shielded cable to the control grid of the output tube that feeds the phase inverter.

(Another method of connection can be used if the a-c radio receiver has phonograph terminals or a phonograph jack connected in such a way

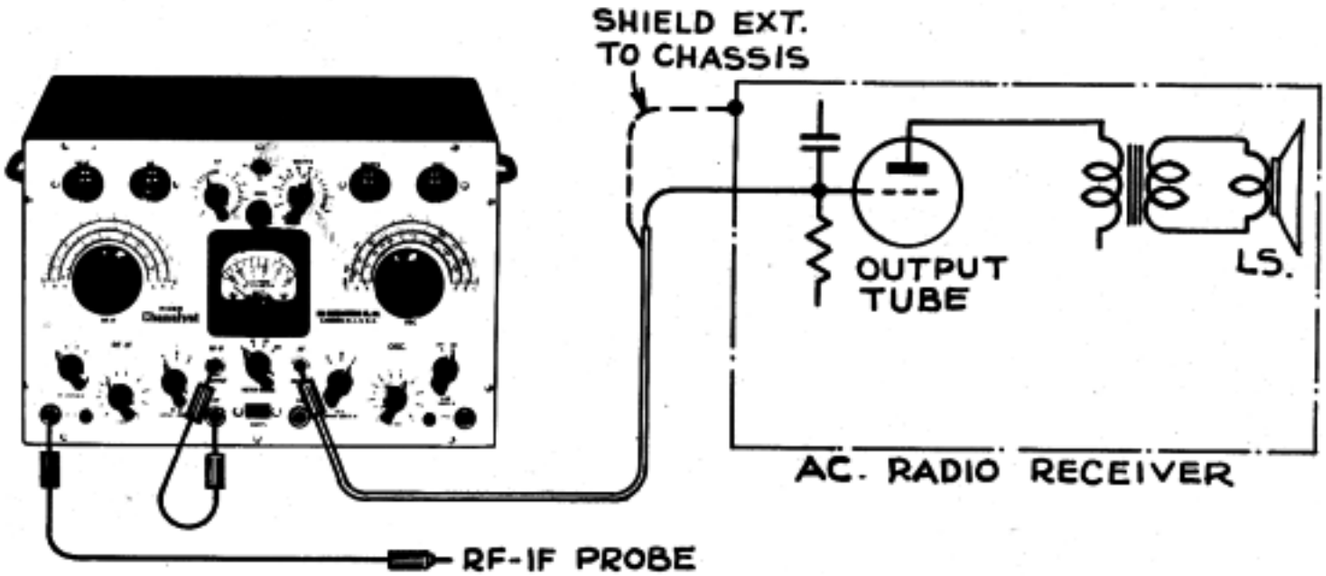

Figure 22a

The method of connecting the output stage and loudspeaker of an a-c radio receiver to the Chanalyst is as follows:

Connect a standard telephone plug on one end of a shielded single conductor cable. Connect the cable to the tip of the plug, and connect the shielding to the sleeve of the plug. Insert the

that the radio volume control also controls phono volume. In this case, connect the shielded cable from the a-f output jack to the phono input terminal or jack on the receiver. Connect a 2.0-megohm ¼-watt resistor in series with the cable at the receiver-end of the cable. Keep the volume control on the receiver turned down to a low point.)

HOW TO USE THE OSCILLATOR CHANNEL

The Oscillator Channel is used for testing the operation of any oscillating circuit over a range of from 600 kc to 15,000 kc. The Oscillator Channel is NOT in itself an oscillator; it is essentially a wide range frequency meter. Its sensitivity is lower than that of the RF-IF Channel.

PRELIMINARY ADJUSTMENTS OF THE OSCILLATOR CHANNEL—The frequency range of the Oscillator Channel, 600 kc to 15,000 kc, is

covered in three bands by setting the "OSC. BAND SWITCH" (third from right on panel) to each band desired and rotating the large tuning knob marked "OSC." on the panel. The oscillator "LEVEL" control is adjusted for maximum sensitivity by turning the knob until it points to "1." The other calibration points indicate the approximate relative signal strength at different settings of the "LEVEL" control.

The oscillator cable plug (brown cable) should be inserted in the jack marked "OSC." at the lower right-hand corner of the Chanalyst panel.

OPERATION OF THE OSCILLATOR CHANNEL—When the oscillator probe point is placed near or in contact with any oscillating or signal-carrying tuned circuit, the signal is fed to the Oscillator Channel. When the channel is tuned to resonance with the circuit under test, the presence of the signal is indicated on the Magic Eye of the Oscillator Channel (upper right of panel). On weak signals the eye will partly close; on stronger ones it will overlap. When overlapping occurs, turn the oscillator "LEVEL" control to the right until overlapping ceases or move the oscillator probe point a fraction of an inch away from the circuit under test. For best results, place the probe as shown in Figures 11 and 12. The frequency of the oscillator is shown by the dial calibration. The channel is properly tuned when turning the "OSC." knob either to the right or left of the proper point causes the channel eye to open.

A pin jack is located at the right near the oscillator "LEVEL" control into which the Electronic Voltmeter probe (blue cable) point may be inserted. When the voltmeter is set on the 5-volt scale, a reading of approximately —0.5 to —1.0 volt will show when the probe is inserted in the pin jack due to contact potential. When the oscillator channel is tuned near the frequency of the signal picked up by the oscillator probe, this reading increases. The maximum negative voltage is indicated on the meter when the channel is tuned precisely to the oscillator signal at the probe point. Though this probe point is isolated from the oscillator cable by a capacity of approximately 1.0 mmfd., even this small capacity may cause appreciable detuning of oscillators at extremely high frequencies. The added sensitivity of the meter indication makes it possible to pick up a signal strong enough to give an indication even when the probe point is well away from the circuit under test and detuning is then negligible.

CHECKING OSCILLATORS IN SUPERHETERODYNES—To check a superheterodyne oscillator, proceed as follows:

(1) Set the "OSC. BAND SWITCH" to the proper range. The receiver oscillator, in the majority of receivers is at a higher frequency than that to which the receiver is tuned. The difference between the receiver oscillator frequency and the frequency of the incoming signal to which the set is tuned is the intermediate frequency. Thus, if we tune the receiver to 600 kc and the i-f is 465 kc, the set oscillator should be operating at 1065 kc.

(2) Place the oscillator probe point on the stator of the oscillator section of the set tuning condenser and tune the Oscillator Channel until the channel Magic Eye closes.

(3) Now move the probe point away from the variable condenser stator (usually the point may be placed on the condenser insulation about an eighth of an inch from the stator lug) and re-adjust the channel tuning until the channel eye shadow decreases most. (Or use the voltmeter indication as described above.) The operating frequency of the receiver oscillator is now indicated by noting the frequency under the hair-line pointer of the channel tuning knob. Under the conditions stated, this should be 1065 kc.

It follows that once we know the operating frequency of the oscillator when the receiver is tuned to a known signal frequency, we can discover what the i-f should be, assuming the oscillator is properly adjusted. In the case given, if we subtract 600 kc, the frequency of the incoming signal to which the receiver is tuned, from 1065 kc, the operating frequency of the oscillator when the receiver is so tuned, the intermediate frequency of 465 kc is determined. This feature will be of great value when the i-f transformers in a given receiver are inoperative and it is necessary to order replacement when data are not available on the i-f transformers.

If the oscillator signal cannot be picked up at or near its expected frequency, try each higher frequency band of the oscillator channel by setting the "OSC. BAND SWITCH" to each higher-frequency band, in turn, and rotating the tuning knob "OSC." over the range. If the signal cannot be picked up on any band, place the Electronic Voltmeter probe (blue cable) on the oscillator grid. If the oscillator is not operating, zero or a positive voltage will be indicated. If the oscillator is functioning, the voltage indicated will be negative.

TESTING FOR OSCILLATOR DRIFT—Receiver fading is often caused by oscillator frequency drift. To test for this trouble, proceed as follows:

(1) Screw the metal clip, provided for the purpose, over the oscillator probe point and connect the clip on, or near, a lug on the oscillator tuning condenser.

(2) Tune the channel to resonance and adjust the oscillator "LEVEL" control until the channel eye just closes, or if the Electronic Voltmeter probe is inserted in the oscillator pin jack, until a maximum negative voltage is shown.

(3) Allow the receiver to operate until the trouble appears, then note if the channel Magic Eye appearance or voltmeter indication has changed.

(4) Retune the Oscillator Channel and note if the frequency has changed. If so, the eye will just close at some other setting of the Oscillator Channel tuning condenser. This new setting will show, not only that the oscillator has drifted, but also how much and in which direction.

The receiver oscillator circuit should then be checked, testing each component until the fault is located.

TESTING OSCILLATOR COUPLING CIRCUITS—In many of the older receivers not employing pentagrid converters, the oscillator is coupled either through a capacity or coupling coil to the mixer tube. The channel may be used to trace the oscillator signal at each point up to the mixer plate.

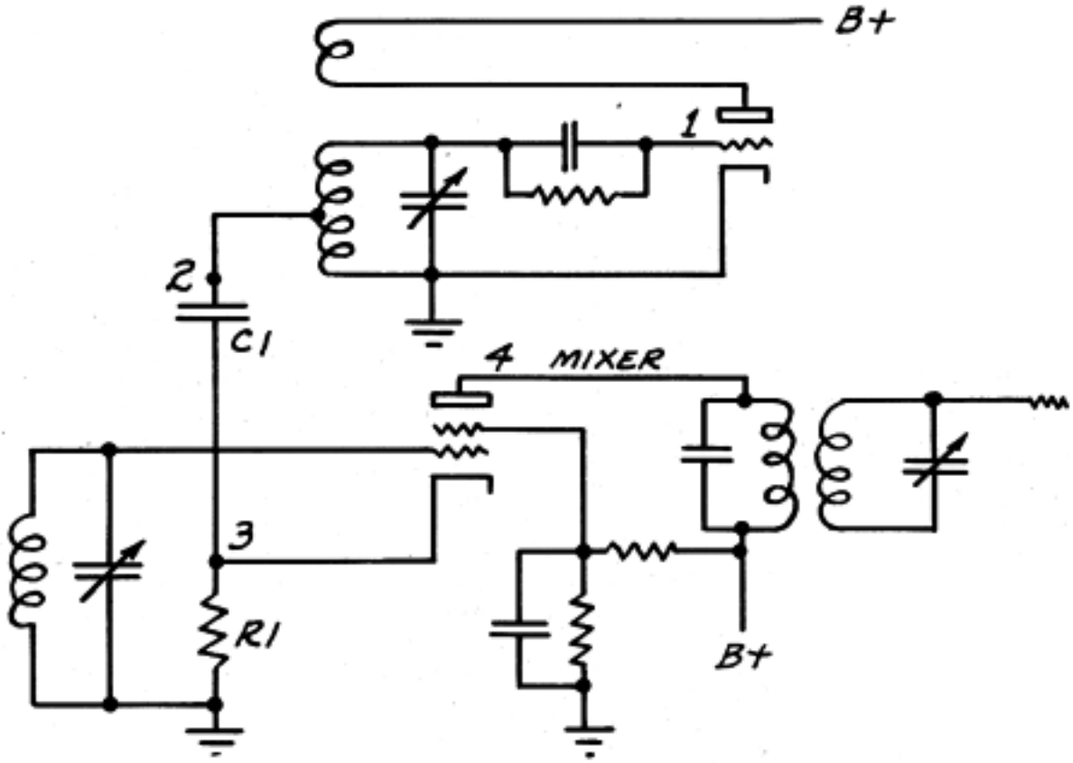

Figure 23

A typical circuit employing capacitive coupling to the mixer cathode is shown in Figure 23. Performance of the oscillator is first established by placing the oscillator probe (brown cable) on "1" and following the procedure described above.

(1) Place the probe at "2." The signal should be present, if absent, connections must be checked.

(2) Place the probe at "3." Presence of the signal shows that C1 and R1 are not grounded. Absence of the signal indicates either a short or open circuit.

(3) Place the probe at "4." The signal should be present. If not, there is trouble in the mixer tube or circuit.

The oscillator section of a typical pentagrid converter is shown in Figure 24. To check its operating frequency, place the probe near the stator lug of the tuning condenser, "1," or near the socket anode terminal, "2."

USING THE OSCILLATOR CHANNEL TO ADJUST OSCILLATOR CIRCUITS IN PUSH-BUTTON RECEIVERS—In push-button receivers that use trimmers or cores for the push-button oscillator circuits, it may be found that there are several different adjustments of the push-button oscillator trimmers that will tune in local stations. The correct adjustment is usually the one where the oscillator frequency is equal to the desired station frequency plus the i-f frequency. Thus if the desired station is at 1000 kc, and the i-f is 455 kc, the push-button oscillator circuit should be adjusted to 1000 plus 455, or 1455 kc. The correct adjustment of each push-button oscillator trimmer can be quickly made by using the oscillator channel (brown cable) probe, turning the "OSC." tuning knob to the correct frequency, and adjusting the push-button oscillator trimmer for

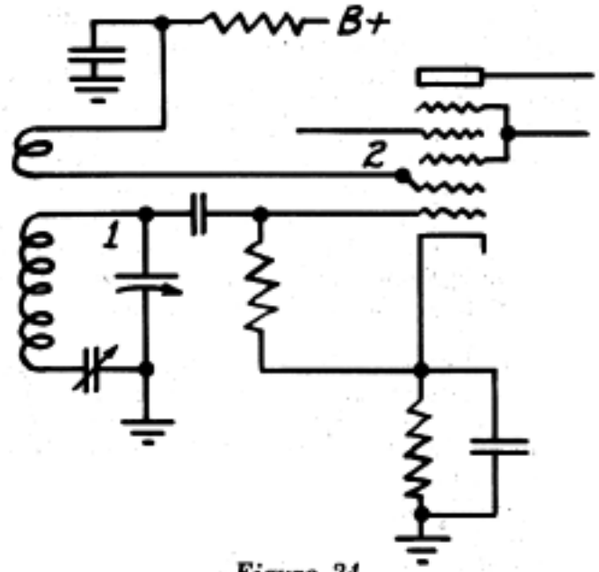

Figure 24

maximum indication on the "OSC." Magic Eye. Final adjustment of the trimmers should be made on actual reception.

This application of the Chanalyst is particularly desirable on loop-type push-button receivers with an untuned r-f stage in locations where there are one or more strong local stations. However, with any trimmer-type push-button receiver, the oscillator channel may be used to determine quickly and definitely the frequency of any or all of the push-button oscillator circuits.

HOW TO USE THE AF CHANNEL

Now that you have followed the signal through to the detector, the next step is to trace it through the audio circuit. This is done with the AF Channel.

PRELIMINARY ADJUSTMENTS OF THE AF CHANNEL—The AF Channel controls should first be adjusted for maximum sensitivity. This is done by throwing the multiplier switch (marked "AF" at the top center of panel) to 0.1 and turning the pointer knob on the "AF" level control (top left of panel) to 1. Insert the green cable plug in the "AF" channel input jack (second from left on panel). Hold the probe handle with your fingers well back from the probe point. This avoids extraneous pickup due to the high sensitivity of the channel.

OPERATION OF THE AF CHANNEL—The presence of an audio signal, noise or hum voltage at any point on which the probe point is placed is indicated by a change in the shadow area of the AF Channel Magic Eye (second from left at top of panel). Weak signals will partly close the eye, while stronger ones will cause it to overlap. The strength of the audio signal can be determined by operating the "AF" level control, the "AF" multiplier switch, and observing the channel eye. With the AF level control knob turned to "1" and the multiplier switch on "0.1," an audio signal of approximately 0.1 volt will just close the eye. If the level control knob is turned to "10" instead of "1," 10 times as strong a signal is required to close the eye. At any other setting of the level control knob, the strength of the signal is likewise proportional to the reading noted on the level control calibration and the actual voltage is 0.1 times this reading. If the eye overlaps even when the level control is turned to 100, throw the multiplier switch to 10 and re-adjust the level control until the eye just closes. The signal strength is then 100 times that indicated by the level control calibration point to which the knob is turned.

Noise and hum are indicated on the channel eye by a fuzzy pattern rather than the usual clearly defined shadow area. Sputtering noise shows up as flickering of the Magic Eye. Noise, hum, and distortion can be heard by plugging in high-impedance crystal headphones in the AF channel output jack. If desired, a cathode-ray oscilloscope may be plugged in instead of headphones and the signal observed on the cathode-ray screen. *When either is plugged in, the channel eye is automatically cut out of the circuit and therefore will not register.*

TRACING THE AUDIO SIGNAL—The audio signal is traced in the same manner as the r-f and i-f signal. The signal generator is connected to the antenna and ground terminals of the receiver. The modulated signal fed into the receiver should first appear as an audio tone at the second detector of a superheterodyne or at the detector of a tuned r-f receiver, so testing with the AF Channel starts at this point.

Testing is done by placing the a-f probe (green cable) directly at each point in the receiver audio system where the signal should normally be present and noting the signal strength and character as indicated by the AF Channel. The normal path of the signal from detector to voice coil is followed and if at any point along this path the signal becomes distorted, weaker, or disappears, this condition will be indicated by the AF Channel. Components likely to cause trouble at any such point are then checked and the fault is located. This method keeps the number of tests required to an absolute minimum and therefore affords the utmost possible speed in shooting trouble.

TESTING INOPERATIVE (DEAD) RECEIVERS—A typical detector-audio system is shown in Figure 25. After the signal has been traced to the detector with the RF-AF Channel, the audio signal should first appear across R1 and R2. The normal path of the audio signal follows in numerical order from "1" to "6."

1. Place the a-f probe (green cable) on "1," making certain that the receiver volume control is at maximum. If no signal is present (indicated by failure of the channel eye shadow area to change) check the components in this circuit. If the signal is present at "1," continue as follows:

2. Place the probe on "2." If no signal is found, check C1 and other components between "1" and "2." If the signal is present:

3. Move the probe to "3." At this point, the signal will normally be amplified and the channel Magic Eye may overlap. When this occurs, turn the level control to the right until the eye no longer overlaps. The exact position is of no consequence as long as the presence of the signal is indicated because our primary concern with a "dead" receiver is in finding the point in the normal signal path where the signal FIRST disappears, and not the relative strength of the signal at various points. When this point is located, test the components affecting the operation of that particular circuit and the trouble will be discovered. At "3," no signal might indicate an open

plate resistor, an open cathode resistor or similar defect in that specific stage. The same reasoning applies at any other of the numbered points in the amplifier circuit. If the signal is present even at the last point, "6," we know it is feeding the speaker voice coil and since no sound results, we must check the speaker coil circuit.

TESTING WEAK RECEIVERS—In the case where the complaint is weak reception, we know the signal will be present at all points, along its normal path. We will assume that the usual quick test of placing a screwdriver or other magnetic metal object in the speaker has shown that the speaker field is functioning by attracting the metal to its core and that the RF-IF Channel tests have shown a strong signal at the detector. In all probability then, the amplifier is not providing sufficient gain so that the speaker can operate properly. Usually this means that one stage is delivering far below its normal signal amplification, since small changes in amplification are readily compensated for by turning up the volume control and therefore pass unnoticed by the customer. To locate the trouble, therefore, we need only a rough idea of how much gain per stage we should expect in a given audio amplifier. With the AF Channel, we can quickly measure the gain per stage as well as the overall gain of the amplifier. This is done in the following manner:*

1. With the signal generator still connected to the receiver input as for the RF-IF Channel tests, which usually should precede the audio tests, adjust the signal generator output until the AF Channel Magic Eye just closes when the a-f probe (green cable) point is on "1," and the receiver volume control is at maximum.

2. Now place the probe (green cable) point on "2." The Magic Eye should again just close, indicating that the signal level has not changed. If the eye opens appreciably, check C1 and wiring between "1" and "2." If the signal is of the same strength as at "1," proceed to test the amplification of the first audio stage.

3. When the probe (green cable) is placed on "3," the Magic Eye should overlap. If so, turn the level control to the right and note the reading at which the eye again just closes. The control was originally set at 1; if it now reads 30, the signal has been amplified 30 times. This is about what we should expect in an audio stage employing a high-mu triode, though in some receivers the gain may be considerably higher, ranging up to 70. Data on gain per stage with different tubes and loads are given in another section, but for trouble-shooting purposes precise information is not necessary. If there were anything radically wrong at this point, the measured gain would be far below the value given.

4. Now move the probe (green cable) to "4." The signal level will not change between "3" and "4" unless there is some trouble in this portion of the circuit.

5. With the probe (green cable) at "5," the power tube plate, the signal should be further amplified. Much depends upon the output transformer characteristics, but normally we find gains ranging from 5 to 20 and therefore, the eye will again overlap. In all probability, turning the level control all the way to "100" will be insufficient to restore the Magic Eye to a "JUST-CLOSED" position, so throw the multiplier switch to "10" and again re-adjust the level control. If it now reads 3, the overall gain from the detector to the output plate is 300 and the gain in the power stage is 10, since the first audio stage contributed a gain of 30.

6. At the voice coil, the signal voltage will be far lower than at the power tube plate since it has been stepped down by the output transformer. Much depends upon the output transformer design and the voice coil impedance, but a step-down of at least 25 or 30 to 1 between a pentode plate and a 10-ohm voice coil should be expected. Therefore, when we place the probe on "6," the eye will not close until we throw the multiplier switch to "0.1" again and re-adjust the level control. If the signal level showed a gain of 300 to the power tube plate and the step-down to the voice coil were 30 to 1, the signal gain measured at the voice coil would be 10. The channel eye

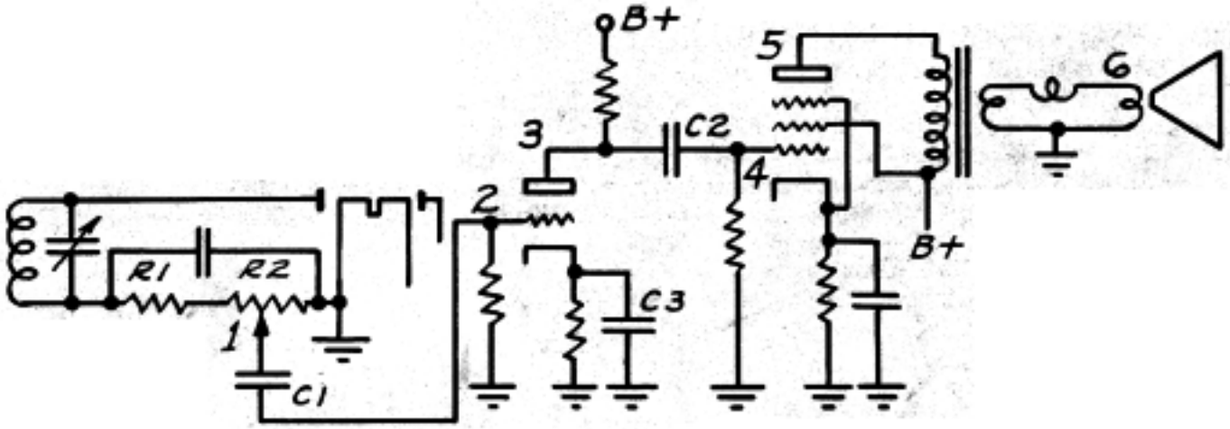

Figure 25

* Special Gain Data Instructions for RCA Victor Receivers are given on pages 47 to 50, inclusive.

would accordingly just close when the level control is set at 10 and the multiplier switch is on "0.1."

If at any point, in this test routine, the signal level is greatly below that expected, stop to check the components in the stage where the trouble is noted. Once the fault is located and corrected, mark down in your service manual or on the receiver schematic diagram the signal level at each stage so that you may know what to expect from a similar receiver when it comes in for test.

In some receivers with very high gain in the audio section, the signal strength may reach such a high level at the power tube grid that the output tube is overloaded. If this is the case, which can be determined by placing the Electronic Voltmeter probe (blue cable) on "4" and noting if a negative voltage is indicated at this point, reduce the signal level until the eye just closes with the level control on "5" AFTER measuring the gain between "2" and "3." The gain between "4" and "5" may then be measured just as it was between "2" and "3."

In some receivers there may normally be several volts of hum at the plate of the output stage. In such cases, it is necessary to use a signal of 5 to 10 volts at the grid of the output stage so that the signal on the plate will swamp out the hum to permit accurate gain measurement. A better method is to use the Stock No. 9907 A-F Adapter between the "AF" Channel jack and the test probe. This adapter, which is available optionally, will attenuate the 60- and 120-cycle hum components but will pass modulation frequencies of 400 cycles and higher.

It cannot be too strongly emphasized that falling into the habit of making exact measurements of stage gain is a waste of time in practical servicing. Find the trouble, fix it, and start another job. Then you will derive the maximum benefit from your Chanalyst.

SERVICING NOISY RECEIVERS—If noise is present in a receiver, we need no signal generator. What we should look for is the noise signal. Assuming that the signal generator has been disconnected and the circuits up to the detector have been checked for noise with the RF-IF Channel, we start in the usual manner to look for noise in the detector circuit.

1. Again referring to Figure 25, adjust the "AF" level control for maximum sensitivity by turning the knob to "1" and the multiplier switch to "0.1."

2. Now place the AF probe (green cable) on "1." If noise is present, it shows on the channel eye as flickering. Or, for better identification, plug in headphones in the AF output jack and listen for noise.

3. If quiet, proceed to "2," "3," and so on, until a point in the signal path is found where noise is present. When this point is located, check components and connections at this point until the fault is discovered. Noise might be present at "3"; we can check at this point by merely moving the AF probe to the plate resistor "B" plus terminal. If there is no noise at the latter point, either the plate resistor or the tube and its connections may be at fault. Similarly, noise at "4" but not at "3" is likely to indicate a defective coupling condenser. Wherever noise is FIRST detected in the normal signal path is where we must test; subsequent tubes and circuits merely amplify the trouble.

TESTING PUSH-PULL CIRCUITS—Testing of audio circuits in which push-pull operation is obtained either by a push-pull transformer or a phase inverter tube follows along the same general signal-tracing routine. In addition, it is possible to check quite simply for proper phase inverter action.

Figure 26 shows a commonly-used circuit employing transformer coupling to push-pull power tubes. The signal is traced by placing the probe at each numbered point in the order marked.

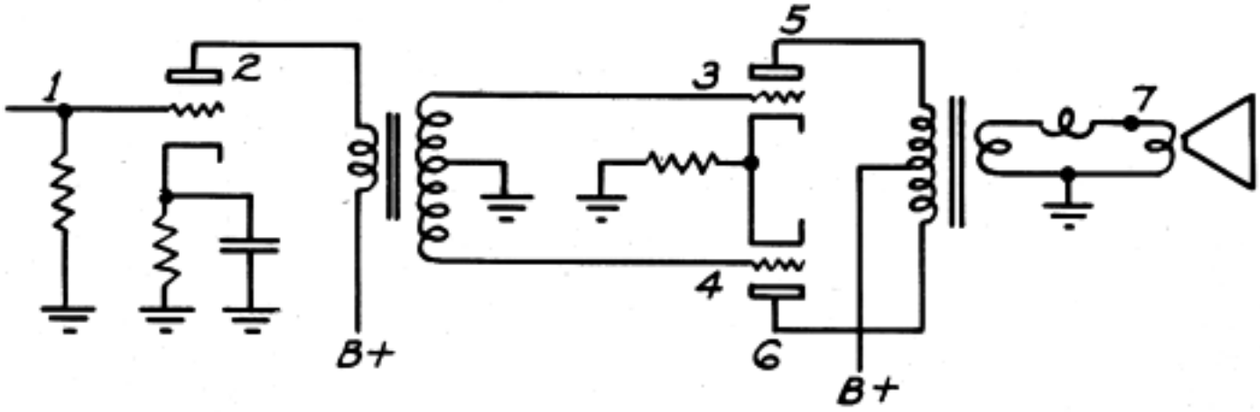

Figure 26

1. At "3," the signal voltage indicated by the channel Magic Eye and "AF" level control setting should be noted. The channel eye should just close.

2. Now, when the probe is placed on "4," the signal level should be the same as at "3" if the transformer is perfect. If not, the channel eye will either open or overlap. Minor differences in signal level at "3" and "4" are of no consequence, but a large difference means trouble in this circuit. Perhaps one-half of the transformer secondary may have shorted turns. Perhaps the signal may be completely absent at either "3" or "4." The receiver will still function but will be notice-

ably defective. Checking components at the point in the circuit where the trouble is noted will reveal the cause.

3. In the output circuit, the signal level at "5" and "6" should be checked with alternate tubes pulled out of sockets, as the output transformer primary action will show the same reading at "5" and at "6," even though one tube is inoperative.

LOCATING THE CAUSE OF EXCESSIVE HUM—The cause of excessive hum is likewise located without the use of a signal generator. Hum is indicated on the AF Channel Magic Eye by a fuzzy pattern. If desired, headphones or the cathode-ray oscilloscope may be plugged in the AF output jack and the hum heard or registered on the cathode-ray tube screen. When the AF output jack is in use, the channel eye does not indicate.

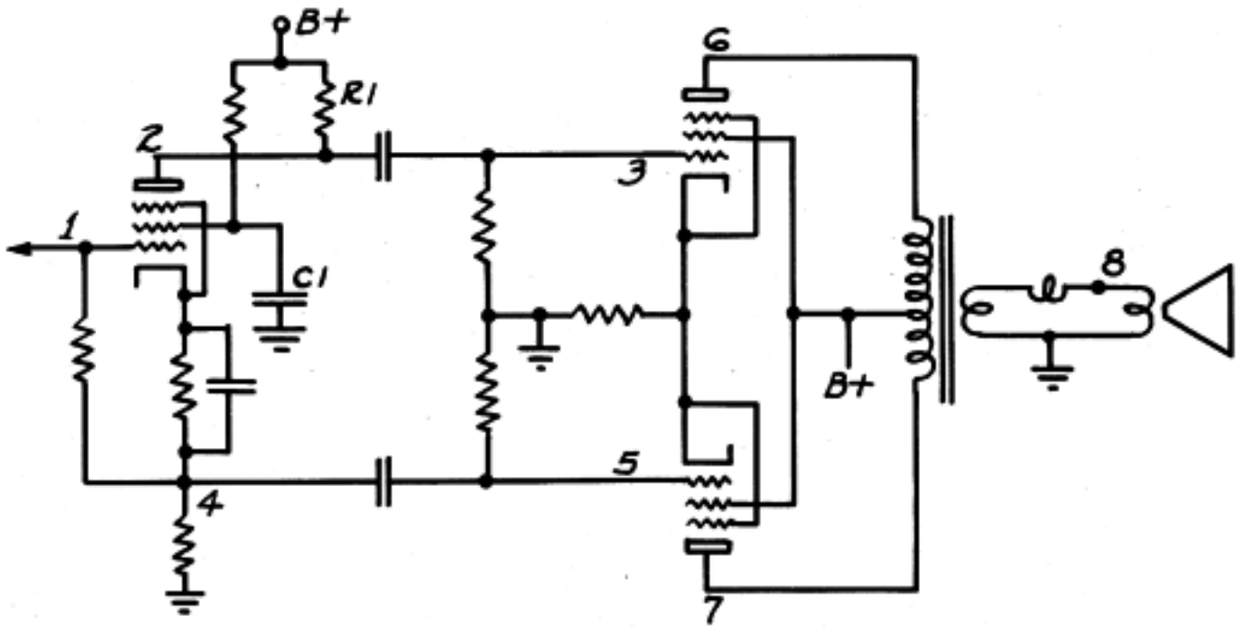

Figure 27

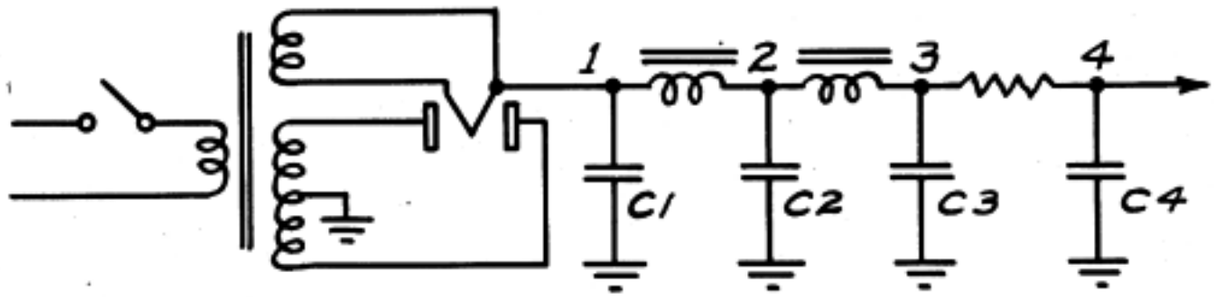

Figure 28

TESTING TUBE PHASE INVERTER CIRCUITS—A typical tube phase inverter is shown in Figure 27. If the phase inversion is operating properly, the signal voltages as indicated by the channel eye should be the same when the probe point is on either "2," "3," "4" or "5." Any appreciable variation in the signal level at any point calls for a check of components in that particular circuit.

The output circuit in Figure 27 is checked in the same manner as described above. The signal level at "6" and "7" in Figure 27 should be the same with alternate tubes removed from their sockets as described above.

Since the cause of excessive hum is most likely to be found in the power supply circuit, it is best to start testing at its point of origin at "1" in Figure 28. At this point, the hum level should be highest and at all subsequent points in the filter circuits the hum level should decrease.

1. Place the AF probe on "1," and adjust the level control until the channel eye just closes or until a moderate hum level is heard in the phones

or shown on the oscilloscope, depending on which method of observation is used.

2. When the probe is then moved to "2," the hum level should be lower. If not, check the filter condenser C2 and if necessary the choke between "1" and "2." An open condenser or a shorted choke would cause the trouble.

3. Continue testing until a point in the filter circuits is found where no appreciable reduction in hum occurs. Checking at that point will quickly locate the trouble.

It should be noted that the hum level in midget receivers is normally considerably higher than in console sets. In the former, the speaker and baffle are so small that a higher hum level is permissible since it will not be reproduced efficiently.

The preceding discussion covers the location of hum troubles in the main section of the power-supply high-voltage filter circuit. Hum which arises from defects in such filter systems is general throughout the receiver, and objectionable whether or not a signal is being received. A similar effect will result from defective or improperly-adjusted hum balancers in receivers employing filament-type tubes. Such devices, if used in the receiver under test, should, of course, be adjusted before proceeding with any tests. If adjustment does not affect the hum level, each hum balancer should be checked. This may be done with the AF Channel in the following manner:

1. Connect the Chanalyst ground clip to the center-tap or moving-arm of the hum balancer.

2. Place the a-f probe (green cable) on one of the two remaining terminals of the hum balancer. Observe the hum level as indicated on the channel eye.

3. Re-adjust the moving arm setting and note if the hum level changes. No change indicates a defective control. If a fixed center tap is employed, place the a-f probe on the other remaining terminal. If the hum level on each terminal is approximately one-half of the total hum voltage across the two terminals, the hum balancer is functioning properly; if not, it is defective.

The principal remaining causes of hum are listed below, with the proper methods of localizing them.

a. Tube defects. (Cathode leakage, shorted or open elements, etc.)

b. Poor ground connections.

c. Induction hum.

d. Shorted hum-bucking coils.

e. Power supply overloaded (due to shorts, etc.).

To localize such defects, follow routine test described under "SERVICING NOISY RECEIVERS." This applies to all defects mentioned above.

f. Carrier hum. Use RF-IF Channel, signal generator and *un-modulated* signal. Trace as for noise.

g. Leaky coupling condensers. Localize trouble with AF Channel following routine described under "NOISE." Check condenser with the Electronic Voltmeter as described in that section.

LOCALIZING DISTORTION—The output of a signal generator or a broadcast signal will be required to test for distortion; likewise phones or the cathode-ray oscilloscope.

In using the oscilloscope in conjunction with the Chanalyst for checking distortion it is desirable, but not essential, that the test signal be free from distortion. The test signal wave form should first be checked by plugging the oscilloscope in the "RF-IF" channel output jack, noting the character of the signal being applied to the receiver input.

This is our reference signal. If it is already distorted, any distorting circuit in the receiver will add more distortion and the wave form of the signal will be correspondingly changed. Components affecting the receiver performance at the point where this change in wave form is *first* noted should then be checked.

1. Adjust the "AF" level control for maximum sensitivity and place the AF probe (green cable) on "1" (Figure 25). Keep the signal generator output low to avoid overloading any stage under test. If distortion is noted at "1," check R1 and R2. An appreciable increase in resistance of either causes distortion. Also check the by-pass condenser and connections.

2. If there is no distortion at this point, place the probe on "2" and readjust the "AF" Channel level control until the same size image is present on the cathode ray tube screen. Distortion here may be caused by a shorted cathode by-pass condenser or an open grid resistor. If the cathode bias is shorted, the tube will draw grid current. This may be checked by placing the Electronic Voltmeter probe point on the control grid "2" and noting if a negative voltage is indicated when the signal is present, increasing as the signal is increased. Normally the voltage from grid to ground should read approximately zero.

3. Tests at other points in the signal path are made similarly, checking the circuit components at the point where the trouble is first noted.

The cathode-ray oscilloscope will be found very useful in distortion tests with the Chanalyst because the probe system of testing removes the usual time-consuming operations that normally occur when attempting to use the oscilloscope in the crowded sections of modern receiver chassis.

If headphones are used, distortion will be more easily detected when a broadcast signal, rather than a test oscillator, is employed for testing. Use a fairly strong signal but not so strong that overloading results. Check the signal level and adjust the "AF" level control, so the eye does not overlap, otherwise the AF Channel may be overloaded.

TESTING INVERSE FEEDBACK AMPLIFIERS—Testing complicated inverse feedback circuits is no more difficult than testing simpler designs. In Figure 29 a typical amplifier employing degenerative feedback from the plates of the RCA-6L6 output tubes to their input circuits is shown. In this circuit, testing first proceeds as for any push-pull transformer-coupled amplifier illustrated in Figure 26. If the inverse feedback circuit in Figure 29 is not working properly, the signal level at "3" will not be the same as that at "4." Likewise, the signal level at "5" will not be the same as "6."

1. To isolate the trouble, compare the signal levels at "7" and "8." At either point the signal level should be lower than at "5" or "6" and both "7" and "8" should be at the same signal level, as indicated by the AF Channel eye and Level Control setting. If there is an open circuit between "5" and "9," the signal at "8" will be stronger than at "7" and all other portions of the push-pull circuit will be unbalanced.

2. The same applies if there is an open circuit between "6" and "10." Then the signal at "7" will be stronger than the signal at "8" and again the entire push-pull circuit will be unbalanced. Short-circuits will correspondingly unbalance the push-pull circuits.

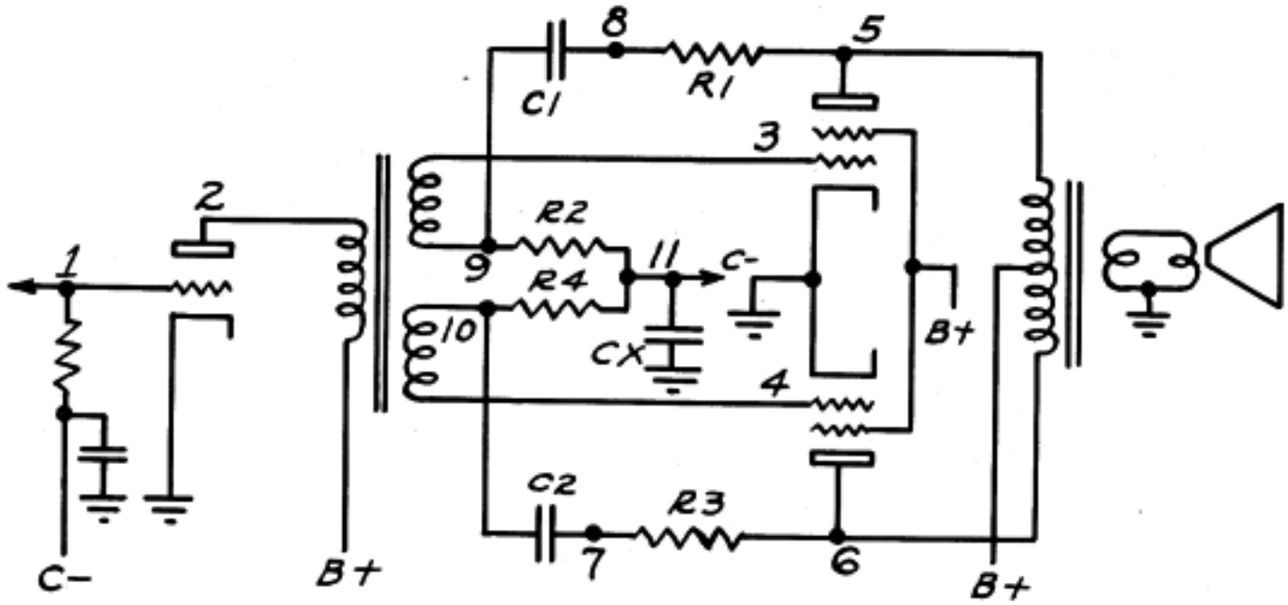

Figure 29

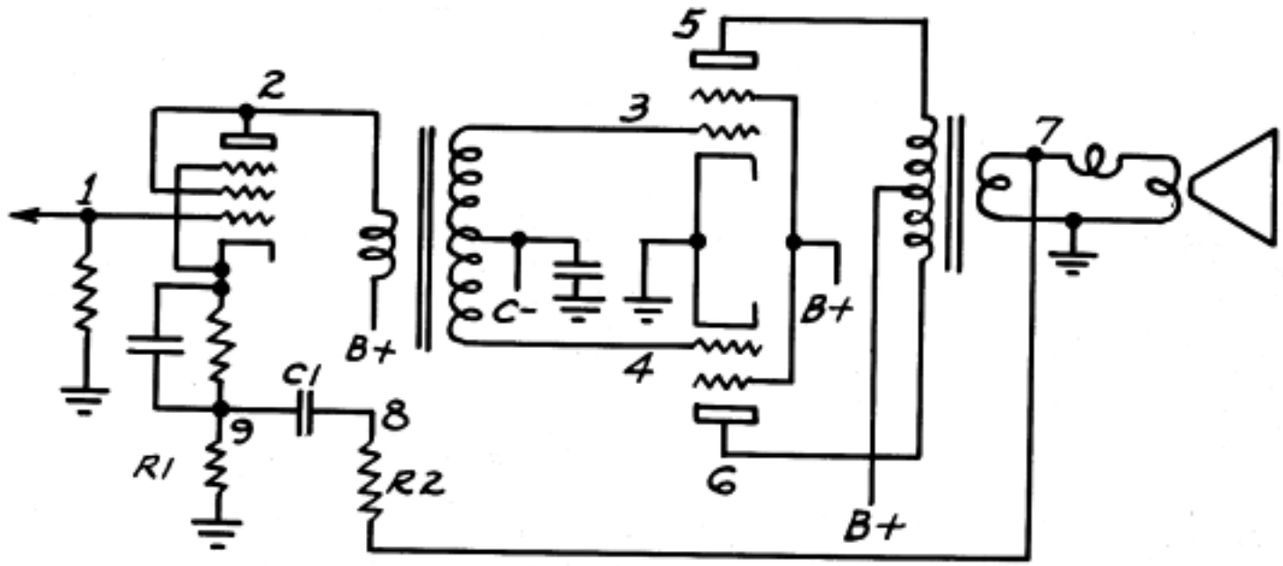

Figure 30

An open circuit at "11" will not unbalance the circuit, but a strong signal at this point indicates that Cx is not effectively by-passing this point.

In Figure 30, the inverse feedback is from the voice coil at "7" through R2, C1 and R1. The signal will normally be present at "8" and "9" even though the inverse feedback network is not

functioning. If the signal is absent at "8," there may be an open circuit between "8" and "7" or "8" and "9" or R1 may be shorted. If the signal is absent at "9" we should check R1. If present at all points, unsolder the connection of C1 to "9." If the feedback network is functioning, the signal at "7" should then increase. If not, check each component in the network.

TESTING AUTO RADIO POWER SUPPLIES—Vibrator power supplies may be checked for noise, hum and hash filtering with the Chanalyst, as well as for other troubles.

A typical synchronous vibrator power supply system is shown in Figure 31. Before checking for noise, hum or hash, proceed as follows:

1. Place the Electronic Voltmeter probe (blue cable) at "6." If the voltage output is far below normal when the supply is connected to its normal load (as specified in the service manual for the receiver under test), remove the vibrator and check for short-circuits from "4," "5," and "6" to ground.

1. Tune the channel to some point in the receiver operating range where the trouble is worst. Then place the rf-if probe at "1" and note the hash level (indicated by a fuzzy appearance on the channel eye, or by listening test on phones).

2. Next, place the probe at "7." The hash level should be lower if the RFC is functioning.

3. Compare the hash level at "4" and "5." It should be lower at "5" than at "4" if the r-f filter is operating properly.

Hash pick-up due to poor grounding of the audio-radio power supply may be detected by placing the RF-IF probe (red cable) on various parts of the car body, chassis, or engine and noting the hash level. A high hash level at any spot indicates inadequate grounding and additional bonding to that spot is needed.

The cathode-ray oscilloscope may be employed for vibrator analysis, by plugging it in the "RF-IF" or "AF" jack. Follow manufacturers' instructions to determine vibrator troubles from the patterns.

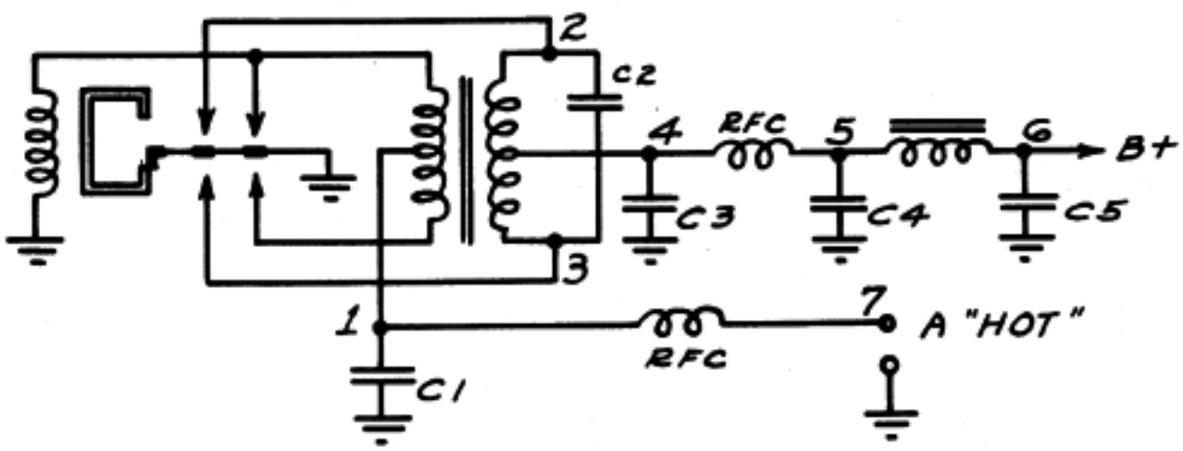

Figure 31

2. If no shorts are present, testing follows the usual routine as for a-c operated receivers. Place the AF probe (green cable) at "1" and note the hum level indicated on the channel eye and "AF" level control. Place the AF probe at "2." The hum voltage at this point should be much higher. If not, check the buffer condenser (C2) for a short; likewise, the vibrator transformer secondary.

3. Now measure the hum level at "3." It should be the same as at "2."

4. Place the probe on "4." The hum level should be much lower than at "3."

5. Place the probe at "5." At this point, the hum level should not change.

6. At "6" there should be very little hum indicated.

Hash or other noise which is picked up in the RF system is checked and localized with the RF-IF Channel. Proceed as follows:

CHECKING TONE CONTROLS AND FREQUENCY COMPENSATING CIRCUITS—Testing the operation of frequency compensating circuits or tone controls is accomplished quite simply by tracing the audio signal through the circuit.

In the frequency-compensating circuit shown in Figure 32, the audio signal level is first determined in the following manner:

1. Place the a-f probe (cable with green tracer) on "1" and adjust the "AF" level control until the channel eye just closes or to some other convenient reference point.

2. The signal should be present, but weaker, at "2" and "3" and absent at "4." An open circuit at "3" or "4" will cause a high signal level at "2," while a short circuit at either point will kill the signal.

While tone controls may be easily checked by a listening test, if the receiver is operating, it is sometimes desirable to know the condition of the

circuit when no speaker is at hand or when the speaker is defective. This may be determined as follows:

1. In Figure 33, place the a-f probe (green cable) on the moving arm of the tone control "1" and notice whether the audio signal strength changes as the position of the arm is varied. Noise or irregular action is indicated on the channel eye by flickering or abrupt changes in the shadow area. If phones are plugged in the audio channel, the condition of the control can be determined by a listening test.

CHECKING POOR GROUND CONNECTIONS—Defective ground connections are readily located by following the usual signal tracing procedure. When the cause of unsatisfactory performance has been localized to one particular stage, checking each component at the point where it connects to ground, will tell whether or not a poor ground connection exists. Referring to Figure 25, let us assume that an audio voltage is discovered at the point where C3 joins the cathode of the amplifier tube. If C3 were functioning properly, this audio signal should be by-passed to ground, and therefore, no signal (or a very weak one) should be present at this point. When a strong signal is present, the condenser C3 is not doing its job. Perhaps it is open; perhaps also the ground connection is open. In either case, C3 will not function. Place the AF probe (green cable) on the ground lead from C3. If the signal is present at this point, the condenser is not open; the ground connection is defective; therefore, the signal is not by-passed to ground.

USING THE AF CHANNEL AS A SEPARATE VOLTAGE AMPLIFIER—In checking low-level microphones, it may be found that the overall gain of the particular amplifier with which the microphone is employed is insufficient for full output. By plugging the microphone in the input jack of the AF Channel and connecting the output of the channel to the amplifier, the AF Channel becomes an excellent pre-amplifier. An additional stage of amplification with a gain of about 40 is added. The high input impedance of the AF Channel (about 2 megohms) adapts it for use with crystal microphones.

USING THE AF CHANNEL FOR CHECKING PHONOGRAPH PICK-UPS—Connect the Chanalyst ground lead and the a-f (green cable) probe to the pick-up terminals. Use a constant frequency record and the AF Channel Magic Eye to determine the output voltage of the pick-up. Use a regular record and crystal phones to check for pick-up distortion. The high input impedance of the AF Channel adapts it for checking either low-impedance (magnetic), or high-impedance (crystal) pick-ups.

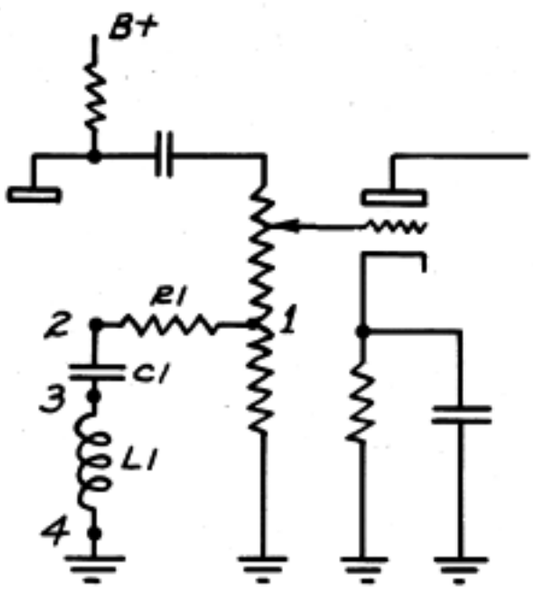

Figure 32

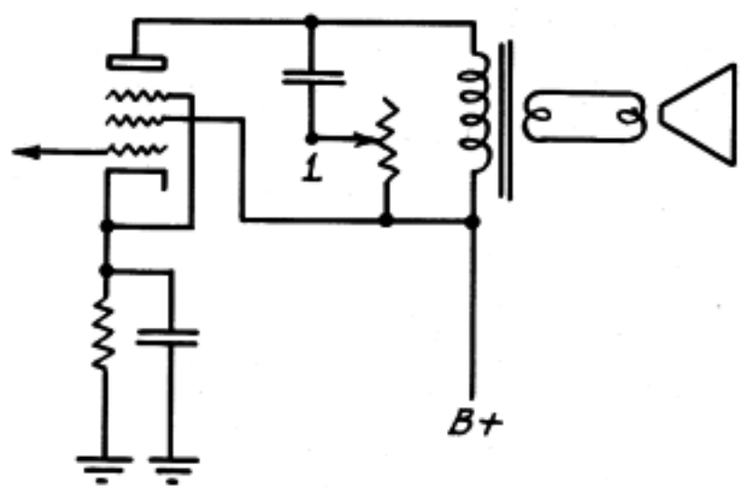

Figure 33

USING THE AF CHANNEL AS AN OUTPUT INDICATOR—The AF Channel makes an excellent output meter for aligning purposes, particularly for receivers without a.v.c. The ease and convenience with which it may be connected to any point in the audio system, combined with its high sensitivity, save time and give accurate results. To employ the channel for this purpose, proceed as described in the chapter on "ALIGNMENT PROCEDURE WITH THE CHANALYST."

LOCATING CAUSES OF AUDIO OSCILLATION—There are three common types of audio oscillation, namely:

1. Motor-boating, or intermittent blocking, caused by defective decoupling or filter circuits in the power supply, open grid circuits in ampli-

fying stages, or feedback due to improper placement of leads or components. To locate the cause of "MOTOR-BOATING" (when present with no applied signal) ground or short circuit the control grid of one of the audio tubes so that the trouble is no longer evident. Then check the power supply and decoupling circuits, following the routine described for locating open condensers. Open grid circuits are located by checking tube voltages with the Electronic Voltmeter.

2. Audio Howl: Located by employing the same routine described under heading, "SERVICING NOISY RECEIVERS."

3. Spurious Oscillation: Found especially in pentode and beam-power tube circuits. Check as for audio howl, but use the channel Magic Eye as indicator. When the AF probe (green cable) is placed on the grid or plate terminal of the affected tube, a high voltage output will be registered, even if the oscillations are of a frequency above audibility.

HOW TO USE THE ELECTRONIC VOLTMETER CHANNEL

The Electronic Voltmeter is used to measure all d-c voltages in any portion of the radio receiver. The electrical zero is at center scale so voltage measurements of either positive or negative polarity can be made without interchanging voltmeter leads. This enables all measurements to be made with a single probe (blue cable) in conjunction with a common ground lead. The probe point is connected to a shielded cable (blue cable) through a one-megohm resistor enclosed within the probe handle. This resistor isolates the capacity and inductance of the cable from the probe point so that voltage measurements can be made in tuned amplifier or oscillating circuits without appreciably affecting their operation.

PRELIMINARY ADJUSTMENTS OF THE ELECTRONIC VOLTMETER—When the Chanalyst power switch is turned off, the Electronic Voltmeter pointer rests at the extreme left end of the scale. If it is below or above the scale limit, the mechanical zero adjuster located in the lower center of the meter case should be turned slightly until the pointer is precisely at the scale limit.

When the Chanalyst power switch is turned on, the meter pointer gradually rises to center scale. Then proceed as follows:

1. Insert the voltmeter cable plug (blue cable) in the Voltmeter jack (second from right on panel).

2. Place the voltmeter probe point against the panel and adjust the electrical zero knob control (marked "ZERO," above the meter) until the meter pointer is precisely at center scale.

3. Connect the Chanalyst ground clip lead, at the rear of the Chanalyst, to the chassis of the receiver under test. If an ac-dc receiver, connect to the variable condenser rotor or other B— point. In some a-c operated receivers, C— is grounded. In all cases, voltages measured are potentials with respect to whichever point in the voltage supply system the clip is connected.

APPLICATIONS OF THE ELECTRONIC VOLTMETER—The design features of the Electronic Voltmeter greatly increase the scope of voltage measurements which now may be made in a radio receiver. With it, it is possible to measure accurately voltages in tuned or oscillating circuits, a.v.c. systems, high-resistance grid, plate and screen circuits as well as diode and bias cell potentials. The usual voltmeters heretofore used by servicemen are totally unsuited for such measurements.

It should be remembered, however, that voltage measurements are of secondary importance in trouble-shooting. Even though every voltage in every circuit is correct, a receiver may be inoperative. Coils may be short-circuited or badly mistuned; leads may be disarranged, condensers may be open, without changing receiver voltages.

The primary test of every receiver is to determine if each signal-carrying circuit is functioning properly. This is done with the RF-IF, Oscillator and AF Channels. When tests with these channels indicate that any specific circuit is not performing as it should, measurements of voltages in that circuit either reveal the fault or eliminate one possible cause. For such measurements, we use the Electronic Voltmeter.

There are likewise conditions in a receiver which do not immediately affect the performance of tubes and circuits, but may lead to trouble at some early date. If voltages in a given circuit are higher than they should be, the operating life of some component may be shortened. In a normally-operating receiver, a single voltage measurement ordinarily will be sufficient to check all power-supply voltages. In Figure 34, for instance, a single measurement from "3" to ground, if normal, is sufficient. Any appreciable variation from normal voltages at other points would likewise affect the voltage at "3."

MEASURING POWER SUPPLY VOLTAGES—Before measuring the power-supply voltages in any a-c operated receiver, BE SURE TO CHECK THE RECEIVER POWER CONSUMPTION WITH THE WATTAGE INDICATOR. If the wattage reading is abnormally high (i. e., more than twice normal) or very low (less than one-half normal), an ohmmeter test rather than a voltage measurement should be made to locate the defective component.

Referring to Figure 34, which shows a typical receiver power supply circuit, voltages may be measured as follows:

1. Connect the Chanalyst ground clip to the receiver chassis.

2. Turn the electronic voltmeter "METER RANGE" switch to the 500-volt range.

3. Place the voltmeter probe (blue cable) on "1." The reading secured is the maximum voltage in the system. (No voltage at this point would be indicated by an abnormal wattage reading as described above.)

CHECKING TUBE VOLTAGES—With the Electronic Voltmeter voltages may be accurately measured directly at tube sockets, even though high resistances are in the circuit under test. The input resistance of the Voltmeter, 11,000,000 ohms, is so high in comparison with the resistance of most circuits in receivers, that negligible loading effect occurs.

Referring to Figure 36, voltages at the tube sockets are checked in the following manner:

1. With the Chanalyst ground clip connected to the receiver chassis, place the voltmeter probe (blue cable) on "1." The a.v.c. voltage applied to the control grid is then indicated.

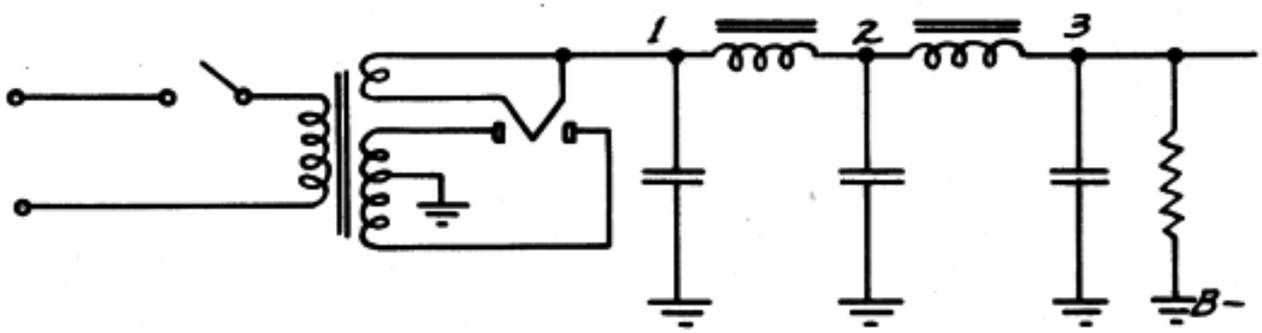

Figure 34

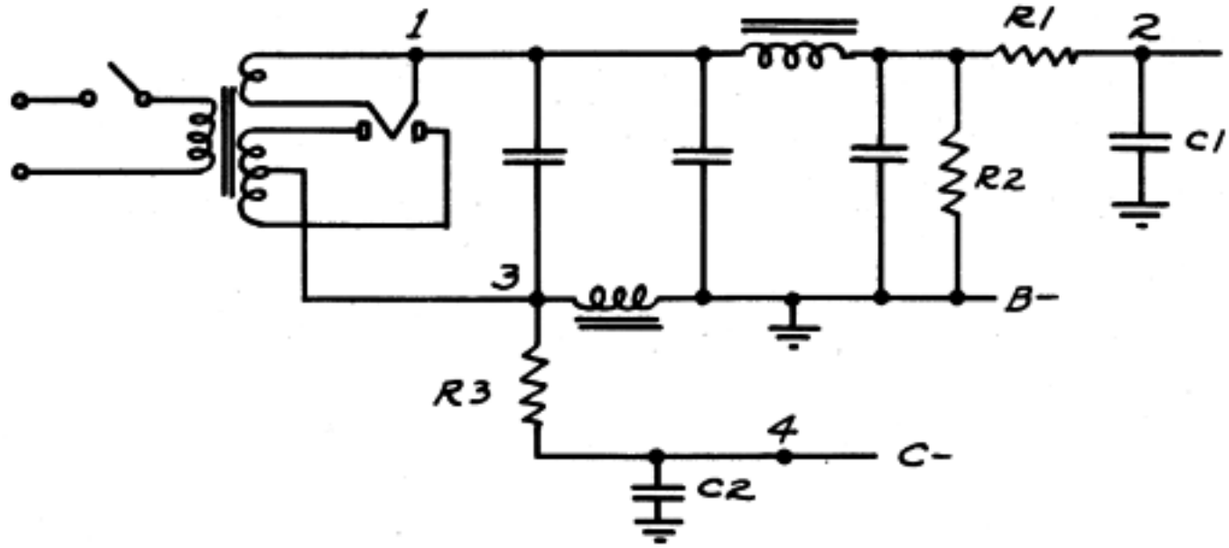

Figure 35

4. Place the Voltmeter probe on "2." The voltage at this point should be lower than at "1."

5. Place the probe on "3." The voltage at this point is commonly around 250, and represents an excellent single reference point for checking after all service operations have been completed.

In Figure 35, measurements are made in the same manner as described above. At "3" and "4," the voltages indicated will be negative, with respect to ground. The advantage of being able to read either negative or positive voltages without interchanging connections is thus apparent.

2. Place the Voltmeter probe on "2." The cathode voltage is then read. If the cathode resistor is open, the Electronic Voltmeter will show a *high* voltage at this point, because the plate and screen currents of the tube will then return to cathode through the voltmeter. If the cathode is shorted, no voltage will be indicated.

3. Turn the voltmeter "METER RANGE" switch to the 500-volt scale and place the voltmeter probe on "3." The plate voltage is then indicated. No voltage reading indicates either an open or short circuit.

4. With the "METER RANGE" at "500," place the Voltmeter (blue cable) probe on "4." The screen voltage is then indicated. No voltage reading indicates either an open or a short circuit. In some tubes, a very low voltage reading may also indicate an open circuit.

Suppressor grids in r-f pentodes are normally connected to ground or cathode, though in some receiver a.v.c. voltage is applied to the suppressor as well as the control grids. An open connection to ground will be indicated by a voltage reading when the probe point is placed on the suppressor grid, if other tube elements receive proper voltages, since some electron current will then flow through the meter.

tunes from a strong to a weak station, though a large change in a.v.c. voltage may result.

Let us assume that this a.v.c. system is defective though the receiver is otherwise normal. Then there will be a large increase in loudspeaker volume when tuning from a weak to a strong station or vice versa. Perhaps the a.v.c. voltage is being applied to some but not to all controlled tubes. With the receiver in operation and tuned to a strong signal, proceed as follows:

1. Check the receiver schematic and locate the tubes which are under a.v.c. control.

2. Place the Electronic Voltmeter probe (blue cable) on "1." A reading of more than —1.0 volt, depending on the signal strength, should be indi-

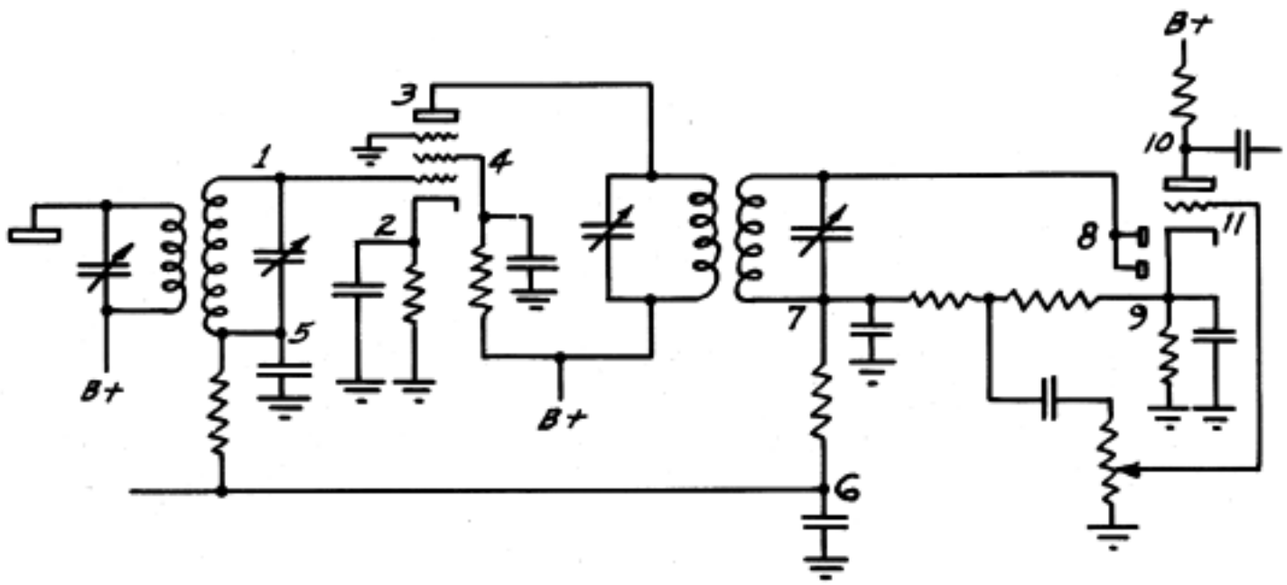

Figure 36

MEASURING A.V.C. VOLTAGES—With the Electronic Voltmeter, a.v.c. voltages may be measured accurately at any point in the system, even at the grids of controlled tubes.

A typical circuit showing a diode detector and a.v.c. system controlling a single preceding stage is illustrated in Figure 36. In the diode detector circuit, some current normally flows even when no signal is being received. This current causes a small negative voltage to be developed across the diode load. This is called the diode "CONTACT POTENTIAL," and causes the diode plate to be from 0.5 to 1.0 volt negative with respect to its cathode. When a signal is applied to the diode circuit, an increase in current flow results, causing a similar increase in this negative voltage. This voltage is used to control the amplification of one or more preceding stages in the receiver. When this system is operating normally, there will be little change in loudspeaker volume when one

cated. Only one controlled stage is shown in Figure 36; if the receiver under test has several such stages, each should be checked. This test may be made very quickly, since the probe is placed directly on the easily-accessible control grids.

3. If there is no a.v.c. voltage at *any* of the grids tested, place the voltmeter probe on "7," the point in the detector circuit where the a.v.c. voltage should first appear. If no a.v.c. voltage is present, check components and connections at this point. If a.v.c. voltage is present, continue testing.

4. Place the probe on "6." This is the only remaining point in the a.v.c. system which is common to all a.v.c.-controlled tubes, therefore, the trouble should be located at this point.

If one tube receives a.v.c. voltage while others do not, simply test at points connecting to the main a.v.c. bus and the grid filter circuit.

TESTING OSCILLATOR OPERATION—A quick and positive test of oscillator operation may be made with the Electronic Voltmeter. "Dead spots" in any portion of the oscillator's normal operating range, as well as the relative strength of the oscillations, are quickly indicated.

A typical oscillator circuit is shown in Figure 37. To test, proceed as follows:

1. With the Chanalyst ground clip connected to the receiver chassis, turn the voltmeter "METER RANGE" switch to "5."

2. Place the voltmeter probe on "1." If the tube is oscillating, a *negative* voltage will be indicated. If the tube is *not* oscillating, the voltage reading will be zero or positive.

3. Rotate the oscillator tuning condenser over the entire bands. Any change in voltage reading indicates a change in the strength of oscillation. In most receivers, the variation in voltage reading will be approximately 2 to 1.

trouble is not indicated by tube checkers, either because it is not present at the moment of test or because the operating voltages in the receiver are different from those used in the tube checker.

With the Electronic Voltmeter, a simple test under actual receiver operating conditions will quickly reveal the trouble.

Referring again to Figure 38, the test is made in precisely the same manner as for leaky coupling condensers. If tube grid current is caused by gas, a *positive* voltage will be indicated by the Electronic Voltmeter.

A small positive voltage (less than 1 volt) is occasionally indicated even when the tube is normal, particularly when the grid resistor is high. When grid current is sufficiently high to cause trouble, however, a reading of several volts will be indicated.

Often several minutes operation are required before this trouble appears. In such cases, the probe

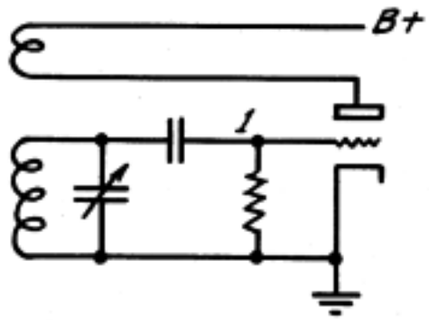

Figure 37

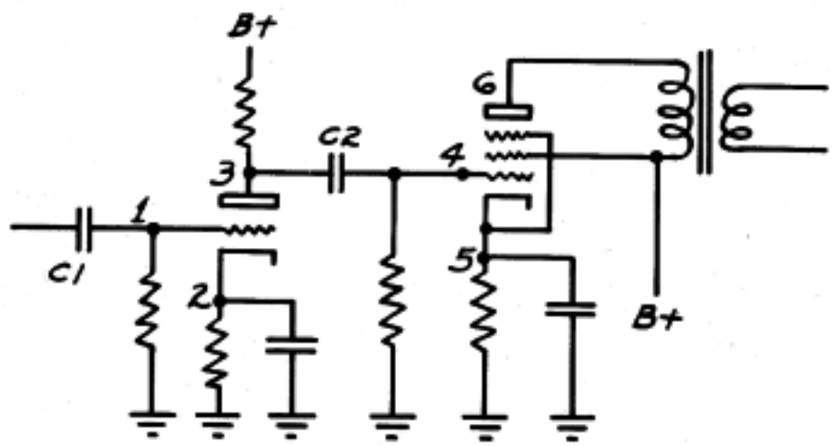

Figure 38

TESTING FOR LEAKY COUPLING CONDENSERS—Leakage in coupling condensers in audio circuits can be detected with the Electronic Voltmeter.

Figure 38 shows a typical two-stage resistance-coupled amplifier. To check the coupling condenser, C2, for excessive leakage, proceed as follows:

1. With the Chanalyst Ground Clip connected to the receiver chassis, turn the Voltmeter Range Switch to "5."

2. Place the Voltmeter probe (blue cable) on "4." The voltage reading should be zero. If C2 is leaky, a portion of the plate voltage at "3" will be impressed on "4." The voltmeter will then indicate a *positive* voltage.

CHECKING GASSY TUBES—Grid current, particularly in power tubes, is often a cause of unsatisfactory receiver performance. Often this

clip may be screwed on the probe point and a semi-permanent connection made to "4" until the receiver trouble occurs. Then a reading of the Electronic Voltmeter will show whether or not the trouble is caused by grid current in the tube under test. Make the reading when no signal is being received by the set.

CHECKING FOR OVERLOAD DISTORTION—Overload distortion, caused by an excessively strong signal being applied to an amplifier tube grid, is indicated in the same manner as described above. When the peak signal voltage exceeds the grid bias, the grid draws current and a negative voltage is indicated at "4," due to rectification.

Since the grid bias on each tube in Figure 38 is dependent on the cathode voltage, if a tube draws grid current with a small applied signal, the cathode voltage should always be checked. A shorted cathode resistor will cause the grid to draw current with little or no applied signal.

HOW TO USE THE WATTAGE INDICATOR CHANNEL

The first step in testing any *A-C operated* receiver is to check its power consumption. This is done with the wattage indicator.

OPERATION OF THE WATTAGE INDICATOR—To operate the wattage indicator, proceed as follows:

1. Insert the receiver power plug in the receptacle at the lower center of the Chanalyst panel.

2. Plug the Chanalyst power cord to any 105-125 volt, 60 cycle outlet and switch on both the receiver and the Chanalyst. The wattage indicator circuit is so designed that either the Chanalyst or the receiver may be turned off independently.

3. After the tubes in the receiver have heated, adjust the "WATTS" level control knob (top right of panel) until the "WATTS" Magic Eye (second from right on panel) just closes. The approximate wattage consumption of the receiver is then indicated by the position of the "WATTS" level control pointer on the wattage calibration scale. This calibration is based on an average power factor of 80 percent, representative of most power transformers in radio receivers. The accuracy of this calibration is more than adequate for the purpose intended but is not a precision measurement of watts.

The wattage rating of radio receivers may deviate as much as 10 percent of the actual consumption which varies with line voltage and manufacturing tolerances. Therefore a precision measurement of wattage is of slight value. The principal function of the Wattmeter channel is to reveal CHANGE of wattage on an intermittent receiver where there is an intermittent open- or short-circuit in the "B" supply or heater circuits. If the wattmeter Magic Eye does not change when the intermittent occurs, it is assurance that the intermittent defect is not in the power supply parts.

FOR AC-DC RECEIVERS—Proceed as described above and note the wattage reading and:

1. Reverse the receiver plug in the Chanalyst receptacle and note the new reading. The wattage indicated will be either higher or lower than that of the first reading.

2. Take the average of the two readings so obtained. This represents the approximate wattage consumption of the receiver. For example, if the first reading were 32 and the second 44 watts, the average is 38 watts.

SUPPLEMENTARY INSTRUCTIONS — The wattage rating of many receivers is given on the chassis identification plate or in the service notes. If not, it can be roughly approximated from the following table:

AC-DC	sets	(single power tube)	40 to 70 watts
AC-DC	"	(two power tubes)	50 to 100 "
A-C	"	(single power tube)	50 to 100 "
A-C	"	(two power tubes)	100 to 200 "

Keep watch on the "WATTS" Magic Eye when the receiver is first turned on. As the tubes warm, the eye will start to close. Then turn the "WATTS" level control knob until it points to the approximate power consumption of the receiver. If the eye overlaps even when you have turned far beyond this point, turn off the set immediately and check for a short-circuit from the rectifier cathode or filament to B minus or ground. If no short is apparent, remove the rectifier tube and turn on the receiver once more. If it still draws excessive current, there may be an internal short in the power transformer or in the wiring to the rectifier or other tubes. This should be checked until the trouble is located.

If the power consumption is much lower than expected, shut off the set and check for an open circuit in the same manner as described above. When the trouble has been located and corrected, the normal procedure of signal tracing may be followed to locate performance defects.

Two flexible insulated leads so arranged that they may be screwed on the probe tips are available for use with the Chanalyst. One of these may be connected to the Electronic Voltmeter (blue cable) probe, thus enabling a voltage measurement to be made simultaneously with that of power consumption. This is done by inserting the end of the flexible wire in a filament or cathode socket of the rectifier tube. The tube is first removed, the wire inserted and the tube replaced thereby making a tight connection. The voltmeter "METER RANGE" switch should be turned to the 500 volt scale. Then, by observing the wattage Indicator and voltmeter reading, the power supply voltage and receiver power consumption are obtained as soon as the receiver is turned on.

ALIGNMENT PROCEDURE WITH THE CHANALYST

For those who so desire, the Chanalyst can be used for broadcast band receiver alignment without the usual necessity for rocking the gang condenser at the low-frequency end of the range. On short-wave bands, the oscillator operating frequency is definitely established and the danger of aligning to the image frequency is thus avoided.

Four channels are employed for alignment purposes, namely:

1. The RF-IF Channel; by connecting its probe (red cable) to the mixer plate, the r-f and mixer input condensers may be aligned, independently of the receiver oscillator. Also, the oscillator operating frequency, up to 1700 kc, may be determined.

2. The Oscillator Channel; the oscillator operating frequency, up to 15 megacycles, can be checked and adjusted.

3. The Electronic Voltmeter; proper alignment in the r-f and i-f systems is indicated when the a.v.c. voltage is greatest. This is measured with the Electronic Voltmeter. Use the probe with the blue cable.

4. The AF Channel; this can be used as a highly-sensitive output indicator in any portion of the a-f system for alignment of receivers not equipped with a.v.c.

ALIGNING SUPERHETERODYNES (WITH A.V.C. CONTROL)—In aligning receivers with a.v.c., either a modulated or unmodulated signal may be employed. The latter is preferable, since some test oscillators provide a broad signal when modulator is used. Proceed as follows:

1. Place the receiver, Chanalyst, and a test oscillator in operation.

2. Make the receiver oscillator tuning condenser inoperative by connecting a clip lead from stator to rotor.

3. Connect the test oscillator to the input terminals of the receiver and tune it to 1400 kc. (Or whatever alignment frequency is specified by the manufacturer for high-frequency adjustment.)

4. With the receiver in operation, turn the tuning knob until the exact alignment frequency is indicated on the dial.

5. Place the rf-if probe (red cable) on the receiver antenna post and tune the RF-IF Channel to resonance with the test oscillator.

6. Now clip the rf-if probe on the mixer socket grid terminal.

7. Adjust the receiver gang condenser r-f and mixer input trimmers until a maximum r-f voltage is indicated by the RF-IF Channel at the mixer grid.

8. Adjust the RF-IF Channel to the intermediate frequency specified by the receiver manufacturer and clip its probe to the mixer socket plate terminal.

9. Now remove the shorting wire across the set oscillator tuning condenser, and, without retuning the receiver, adjust the oscillator trimmer condenser until a maximum i-f voltage is indicated by the RF-IF Channel.

10. Tune the test oscillator, the RF-IF Channel and the receiver to 600 kc.

11. Make the receiver oscillator tuning condenser inoperative (see operation 2).

12. With the rf-if probe (red cable) still connected to the mixer plate, re-tune the receiver until the 600-kc signal voltage is a maximum, as indicated by the RF-IF Channel.

13. Remove the shorting wire from the oscillator tuning condenser, tune the RF-IF Channel to the i-f prescribed by the receiver manufacturer and adjust the oscillator padder condenser until the i-f signal is a maximum.

14. Since the adjustment of the oscillator padder at 600 kc will change slightly the preliminary 1400-kc adjustment, again tune the test oscillator and the receiver to 1400 kc. Using a weak test signal, re-adjust the oscillator trimmer condenser until the i-f signal at the mixer plate is a maximum.

The r-f alignment is now complete. To align the i-f section, continue as follows:

15. Move the RF-IF probe (red cable) to the first i-f plate and adjust the first i-f transformer trimmers until the channel indicates a maximum i-f signal. Reduce the test oscillator signal while making this adjustment, using just sufficient signal to note the effect of trimmer adjustments.

16. Repeat this procedure for the next i-f stage, moving the RF-IF Channel probe to the second detector diode if there is but one i-f stage. Continue reducing the signal voltage as the i-f stages are brought into alignment. If one or more broadband i-f transformers are employed, shunt a 20,000-ohm resistor across the secondary before adjusting the primary trimmer. After the primary has been adjusted, put the shunting resistor across the primary and adjust the secondary for maximum output.

If desired, the IF amplifier may be aligned first, using the Chanalyst as an output indicator or using the cathode ray method, and then the RF amplifier may be aligned in accordance with operations 1 to 14 inclusive above.

ALIGNING SUPERHETERODYNES (WITHOUT A.V.C.)—The procedure described above applies likewise to receivers without a.v.c.

CHECKING TRACKING ON SHORT-WAVE BANDS—The Oscillator Channel is employed to determine the operating frequency of the receiver oscillator. Tracking on short-wave bands can thus be checked. Follow the manufacturer's instructions for aligning, then check the oscillator frequency as follows:

1. Tune in a signal of known frequency at the high-frequency end of the band.

2. Measure the receiver oscillator frequency (as described in the Oscillator Channel section).

3. Note if this frequency is higher or lower than the signal frequency. In most receivers the oscillator frequency should be higher. If not, it is so specified in receiver service notes.

4. Repeat above procedure for the low-frequency end of the band. The receiver oscillator frequency should bear the same relation to the signal at both ends of the band. That is, if it is higher in frequency at one end of the band, it should likewise be higher in frequency at the low-frequency end of the band.

Note that the final adjustment of the oscillator should follow in accordance with conventional alignment procedure.

ALIGNING TUNED R-F RECEIVERS—The conventional alignment procedure can be followed, using the AF Channel as a sensitive output indicator. The a-f probe (green cable) may be connected at any convenient point in the a-f system when the signal is present.

ALIGNING A.F.C. CIRCUITS—Complicated a.f.c. discriminator tube circuits may be rapidly and accurately aligned with the Electronic Voltmeter.

A typical a.f.c. discriminator circuit is shown in Figure 39. To align, proceed as follows:

1. With the a.f.c. switch off, tune the receiver to a strong signal.
2. Turn on the a.f.c. switch.
3. Connect the Chanalyst ground clip to ground.
4. Place the Voltmeter probe (blue cable) on "2."
5. Adjust the trimmer condenser on the primary of the discriminator transformer until a maximum voltage reading is indicated at "2."
6. Place the Voltmeter probe on "3."
7. Adjust the discriminator transformer secondary trimmer until the voltage reading at "3" is zero. In some circuits, zero voltage will not be obtained; for these circuits, adjust the secondary trimmer so that no change in voltage is obtained when the signal input is reduced to zero.

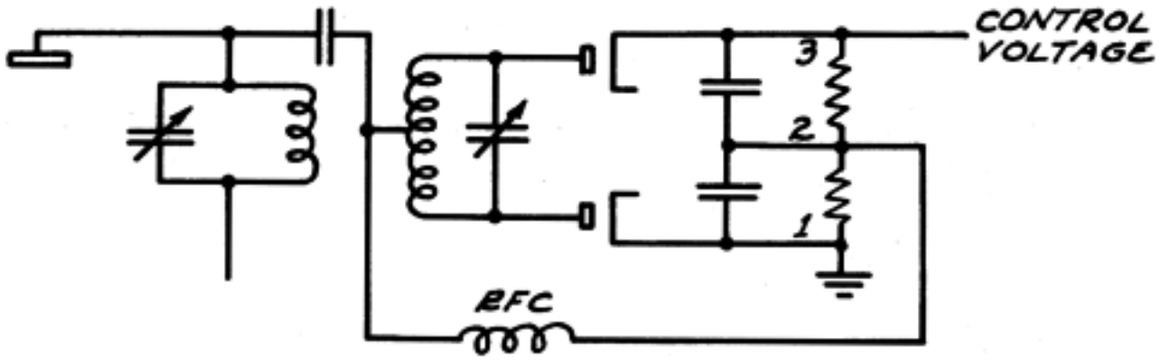

Figure 39

SERVICING INTERMITTENT RECEIVERS

Unquestionably one of the most difficult and exasperating problems which faces the radio service industry is the servicing of intermittent receivers. When such a receiver "CUTS-OUT," the minute electrical charge resulting from touching a test probe to any portion of the receiver will often restore operation for an indefinite period. Even less unstable receivers, which "FADE" slowly, are likely to return temporarily to normal if voltage measurements are attempted. And often the cause of such troubles does not affect receiver voltages. IN EVERY CASE, HOWEVER, THE SIGNAL IS AFFECTED, and with the Chanalyst, the particular circuits in which the signal level changes are promptly identified without disturbing the set components. The test probes are connected to key points in the receiver circuits, the level controls are adjusted to give a predetermined indication on Magic Eyes of the various channels. Then, when the receiver becomes intermittent, a glance at the Magic Eyes tells which receiver circuits are affected and the trouble is localized. Finding the defect is thus greatly simplified.

A block diagram of a typical superheterodyne receiver is shown in Figure 40.

The circuit includes an r-f stage, mixer, i-f, detector and two a-f stages.

To test such a receiver, we divide the circuit into five major sections and monitor the operation of each one. To do this, proceed as follows:

1. Plug the receiver in the "TEST WATTS" receptacle and adjust the "WATTS" indicator level control until the Magic Eye just closes.
2. Connect a signal generator to the input of the receiver and feed a modulated signal of approximately 600 kc to the receiver.
3. Screw on the clips provided for each probe tip. This enables the probes to be fastened to any circuit which it is desired to test.
4. Clip the RF-IF Channel probe (red cable) on the stator lug of the variable condenser which tunes the mixer input circuit.
5. Similarly, connect the Oscillator channel probe (brown cable) to the receiver oscillator tuning condenser.
6. Connect the AF Channel probe (green cable) to the plate or control grid terminal of the first a-f tube.
7. Connect the Electronic Voltmeter (blue cable) to the a.v.c. bus (or to the control grid of any tube) receiving a.v.c. voltage.
8. Tune the receiver to resonance with the signal. Tune the RF-IF and Oscillator Channels

to resonance with the circuits to which they are connected. Adjust the Level Controls on each channel until each Magic Eye just closes. Note the a.v.c. voltage indicated on the Electronic Voltmeter.

We assume that the set is operating normally after these preliminary monitoring adjustments and connections have been made. Since the signal level in each part of the receiver is now monitored, any change in the operating condition of the receiver will be indicated by a change in the signal level of the stages or circuits affected.

lator Channel. Since the r-f stages are not affected, the rf-if indicator Magic Eye will not change. However, since the signal level in all other portions of the receiver is reduced, the indications will change accordingly.

When the r-f section is controlled by the a.v.c. circuit, the r-f indicator will overlap because failure of the oscillator reduces the a.v.c. voltage.

INTERMITTENT OPERATION IN THE IF STAGES—In case the source of intermittent operation is due to some defect in the i-f stages, the

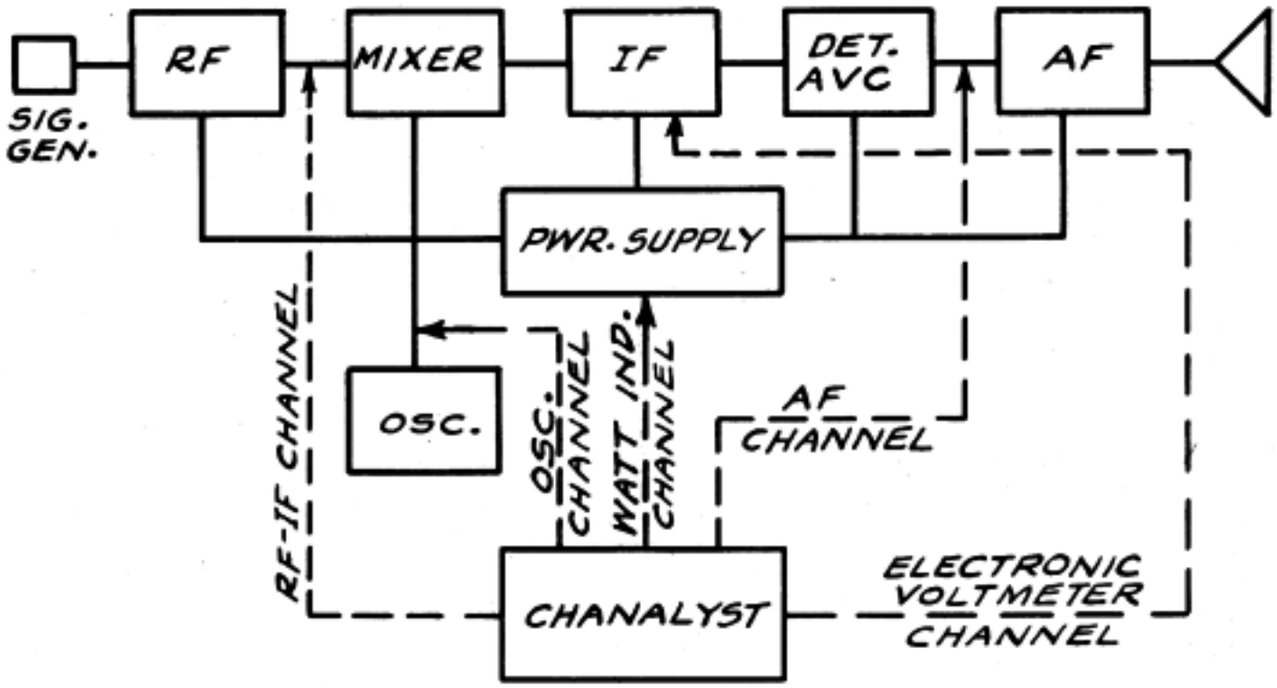

Figure 40

INTERMITTENT OPERATION OF THE RF SECTION—If the cause of intermittent reception is in some circuit ahead of the mixer tube, the following changes in the Chanalyst Magic Eye will take place:

1. The RF-IF Channel Magic Eye will open, since the r-f signal at the mixer will be reduced.

2. The AF Channel Magic Eye will likewise open, since the a-f signal will also be weaker.

3. The a.v.c. voltage as indicated by the Electronic Voltmeter will change or, if the defect is of such nature that the power consumption of the receiver is appreciably changed, it will be registered on the "WATTS" indicator Magic Eye. If a short-circuit has occurred, the eye will overlap. If a voltage supply circuit has opened, the eye will likewise open. Minor changes in power consumption are not indicated by the eye.

INTERMITTENT OSCILLATOR OPERATION—If the source of trouble is in the oscillator circuit, whether caused by oscillator drift, intermittent operation or irregular output, the defect will be indicated on the Magic Eye of the Oscil-

a.v.c. voltage will be decreased causing an increase in signal gain in the r-f stages. The "RF-IF" Channel Magic Eye will accordingly overlap. The "OSC." Channel Magic Eye will not change; the "AF" Channel Magic Eye will open; the "WATTS" indicator Magic Eye will change as described above if the receiver voltages are appreciably affected.

INTERMITTENT OPERATION IN THE DETECTOR OR AF SYSTEM—When the cause of the intermittent operation is the result of some trouble in the detector or first a-f stage, the "AF" Channel Magic Eye will be affected. The indications of the "OSC." channel eye, Electronic Voltmeter and the RF-IF Channel Magic Eye will not be changed unless the defect is of such nature that voltages throughout the receiver are appreciable altered. In such cases, the "WATTS" indicator Channel Magic Eye will likewise change thus indicating the nature of the trouble.

If the intermittent operation is such that a long period of time elapses before the receiver fades, it is sometimes more convenient to use a broadcast signal than a test oscillator signal. If this is done,

the AF Channel attenuator should be set so that the "AF" Magic Eye just closes on modulation peaks.

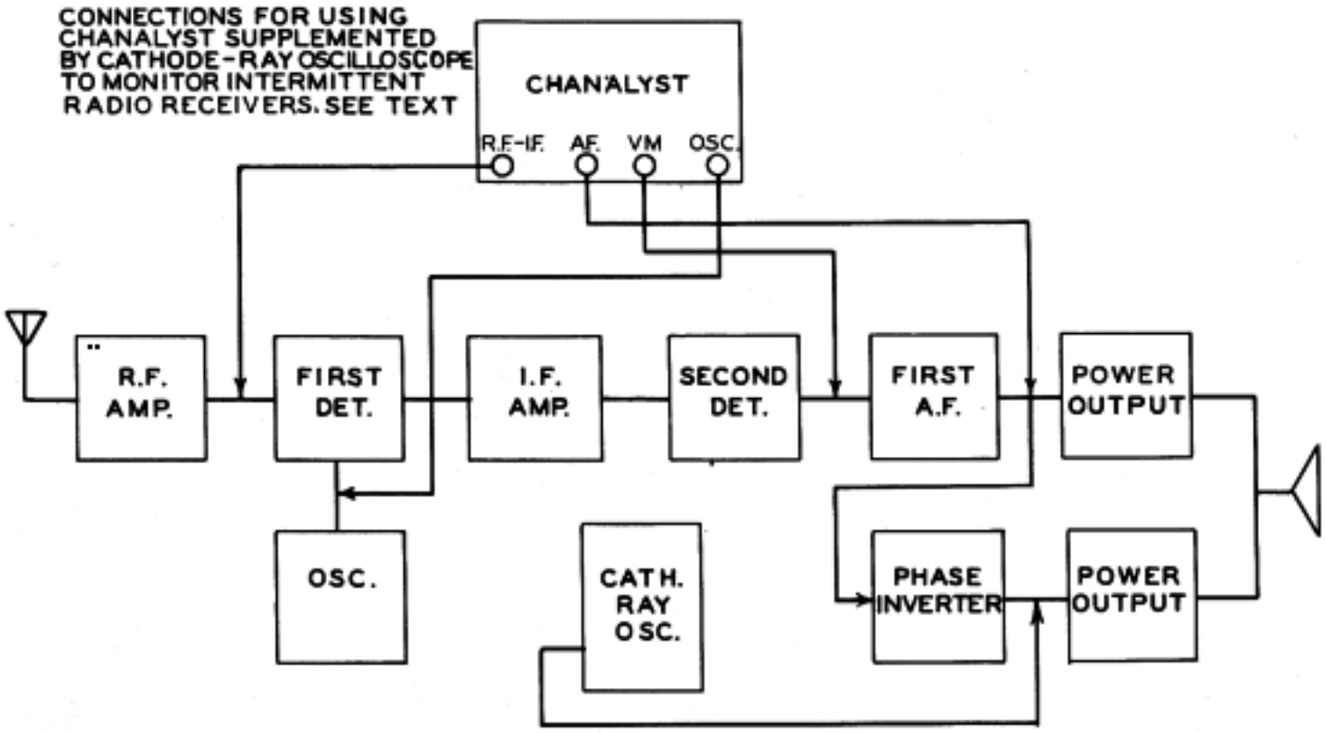

Figure 41

TO USE THE CHANALYST SUPPLEMENTED BY A CATHODE-RAY OSCILLOSCOPE TO MONITOR AN INTERMITTENT RECEIVER— In the block diagram, Figure 41, the Chanalyst is shown as used in conjunction with a cathode-ray oscilloscope to monitor intermittent radio receivers. As will be evident from inspection of this drawing every section of the receiver is covered by a channel of the Chanalyst or by the cathode-ray oscilloscope, while the output is monitored by the receiver speaker. In this manner the defective section of the receiver may be quickly located.

HIGH-SPEED TROUBLE-SHOOTING WITH THE CHANALYST

In the foregoing chapters, the manner in which the Chanalyst functions has been described in considerable detail and many of the almost limitless applications of the instrument in radio servicing have been outlined. If every receiver were subjected to the entire signal-tracing routine, and the defective conditions thus revealed were corrected, the quality of workmanship in nearly all service shops would be immeasureably improved. Though this routine takes but a few moments (merely the time required to move the probe from point to point and readjust controls) even greater speed is possible when one is entirely familiar with the operation of the Chanalyst and the receiver under test.

In giving estimates, for instance, one would not proceed to correct each receiver fault as it is revealed by signal-tracing tests. Then, the cause of one specific receiver trouble is required. In such cases, the test procedure can be further simplified.

Set troubles, other than intermittent operation, may be divided into five groups, namely:

1. No reception.
2. Weak reception.
3. Noisy reception.
4. Excessive hum.
5. Distorted reception.

The location of such specific troubles can be speedily determined by tests which embrace whole sections of the receiver, rather than individual stages. The procedure follows:

1. No reception. Feed a strong signal to the receiver. With the Electronic Voltmeter (use the blue cable probe) check the a.v.c. voltage. If a.v.c. voltage is absent, the trouble is in the power-supply or in some portion of the receiver ahead of the second detector.

2. If there is no a.v.c. voltage and the power-supply voltages are correct, check r-f signal at mixer grid. Use the RF-IF Channel and red cable probe. If the signal is absent, the trouble is in the mixer or in the r-f stage. If signal is present, the trouble is in the oscillator or the i-f stage.

3. Check oscillator with Oscillator (brown cable probe) or RF-IF Channel (red cable probe). If operating properly, the trouble is in i-f stages.

The foregoing shows how quickly such troubles may be localized. It is assumed, of course, that the Wattage Indicator test has shown normal power consumption. If the receiver is equipped with a.v.c. check signal at "1" antenna post, "2" at mixer grid, "3" at second detector, "4" first a-f plate. If, at any of these points, the signal is absent, test stage by stage including points where signal was last found. If signal is present at all points, trouble is in the output stage.

WEAK RECEPTION—Check a.v.c. voltage with Electronic Voltmeter, as in "1" above. If subnormal, check power-supply voltage. If a.v.c. voltage is normal, trouble is in the a-f system. If not, and power-supply voltage is OK, check level at mixer grid. If OK, check oscillator. Follow with i-f gain check to locate trouble. For receivers without a.v.c., check signal level at mixer grid, second detector, and first a-f plate. Low gain between any two points indicates trouble in the receiver section last tested. Normal gain indicates trouble in output stage.

NOISY RECEPTION—Use headphones or oscilloscope. Check (without signal) for noise at mixer grid. If absent, check at last i-f grid, following, if necessary, to first a-f and speaker voice coil. Trouble is located at point where noise is first noted or between that point and the last previous test point.

EXCESSIVE HUM — Check power-supply; check at last i-f stage as for noise; check first a-f stage.

MODULATION HUM—Check for hum on the supply voltages to all elements of all tubes. Use the AF Channel of the Chanalyst with headphones or a cathode-ray oscilloscope on its output.

DISTORTED RECEPTION—Check as for noisy reception.

ENGINEERING APPLICATIONS

The flexibility and speed of the Chanalyst makes it unusually valuable in development work on radio receivers and other electronic apparatus.

In addition to its normal application for fast location of "bugs" in experimental models, it provides rapid checks on engineering features, such as—

SELECTIVITY

Image attenuation.
Adjacent-channel attentuation.
I-F Attenuation.

EXTRANEOUS SIGNALS

I-F in audio input circuit.
Second harmonic of i-f in r-f input circuits.
Harmonics of heterodyne oscillator in r-f input circuits.
Hum and audio modulation at plus B points.

TRACKING

Tracking of r-f stages.
Tracking of r-f and oscillator.

ATTENUATION

Attentuation of r-f traps and filters.
Attenuation of a-f traps and filters.
Attenuation of transmission lines.

GAIN

Gain of r-f, i-f and a-f transformers.
Gain of r-f, i-f, and a-f tubes.

MISCELLANEOUS

Automatic volume control action.
Modulation distortion.
Hum modulation.
Distortion through entire circuit.
Dead-spots in tuned circuits.

USING THE CHANALYST AS A UNIVERSAL LINK—An extremely valuable application of the Chanalyst, particularly in the communication field, is its use as a universal r-f, i-f, or a-f link. For example, if the i-f amplifier unit in a receiving system goes dead, the RF-IF channel may be tuned to this particular intermediate frequency and "patched" across the input and output terminals of the defective unit to permit uninterrupted service.

USING THE RCA SIGNALYST IN CONJUNCTION WITH THE CHANALYST—The RCA Signalyst is designed as a companion piece for the Chanalyst. The Signalyst is a modern signal generator with metered output in microvolts. It is accurately calibrated and covers the extremely wide frequency range of 100 kilocycles to 120,000 kilocycles (0.1 megacycle to 120 megacycles) which includes the bands assigned to frequency-modulation and television.

The Signalyst and Chanalyst make an unbeatable combination for radio service and engineering.

AVERAGE GAIN-PER-STAGE VALUES

The figures on gain-per-stage listed below are based on the assumption that the receiver a.v.c. system is not operating. A.V.C. action will reduce considerably the r-f, mixer, and i-f stage gains. For comparison purposes, a weak signal should be used, or the a.v.c. circuit temporarily shorted out.

In the a-f section, for resistance-coupled amplifier, the lower gain figures represent average gains for ac-dc receivers while the higher gains apply to a-c operated receivers.

RADIO-FREQUENCY SECTION—

Antenna to grid of first tube	1.5 to 10
Antenna to grid of first tube (auto-radios)	15 to 50
R-F Amplifier	2 to 40

MIXER SECTION—

Converter grid to i-f grid (1 stage i-f amp.)	30 to 60
Converter grid to i-f grid (2 stage i-f amp.)	5 to 20

INTERMEDIATE-FREQUENCY AMPLIFIER SECTION—

I-F stage (1 stage i-f amp.)	40 to 150
I-F stage (2 stage i-f amp.)	5 to 20

BIASED DETECTOR—Types 57, 6C6, 6J7—A 1.0 volt r-m-s signal (20 percent mod.) at the grid will produce approximately 10 volts r-m-s of a-f at the plate.

AUDIO-FREQUENCY SECTION—

RCA-75, 2A6	40 to 55
RCA-6F5	40 to 55
RCA-6Q7	30 to 45
RCA-6N7, 6C8 (each section)	20 to 25
RCA-2B7, 6B7, 6B8	50 to 80
RCA-6F6, 2A5, 47 (grid-to-plate)	10 to 20
Triode output tubes	2 to 5

A.V.C. VOLTAGE—A.V.C. voltage may run as high as 40 volts, depending upon the strength of the input signal and the number of tubes under control. In general, the greater the number of tubes controlled the lower the a.v.c. voltage for a given input signal.

MAINTENANCE

While extraordinary care has been taken in the manufacture and test of the RCA-Rider Chanalyst and each instrument is laboratory tested under strict engineering supervision, in the course of use it is possible that the instrument may require checking and servicing.

REPLACEMENT OF TUBES—The Chanalyst is so designed that the calibration of the various controls and the performance of the instrument are essentially independent of changes in the tubes. Tubes may be replaced in the RF-IF, Oscillator,

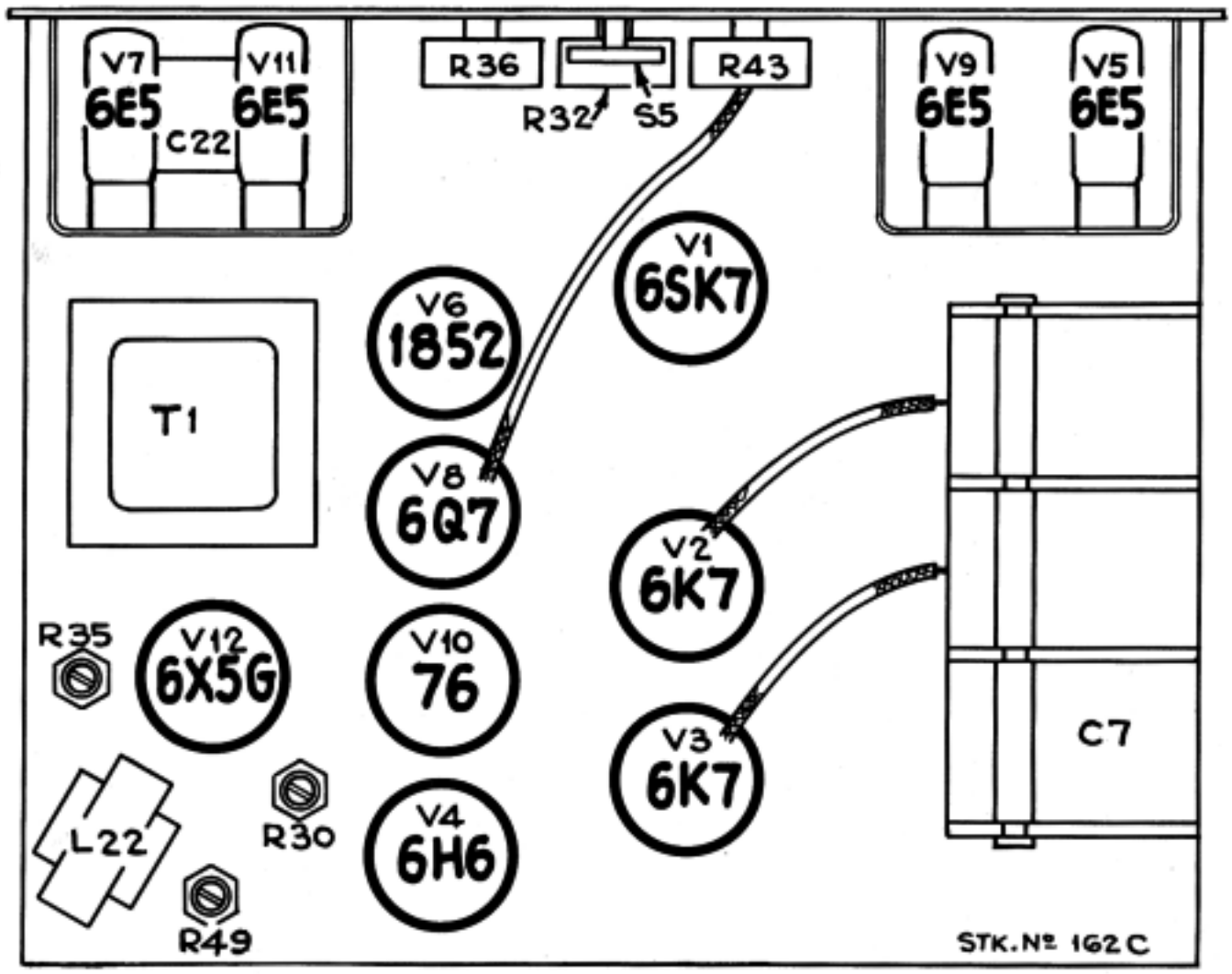

Figure 42—Tube and Adjustment Layout (Top View)

Component parts of the Chanalyst are indicated by symbol number in Figure 1, schematic wiring diagram and, in the drawings, Figure 42, a top view of the chassis with case removed and Figure 43, a sub-chassis view of the unit.

and Voltmeter Channels without the necessity for any adjustments. However, when the Magic Eye in the Wattage Indicator Channel is replaced, it is desirable to carry out the following adjustment.

With the line voltage at an average value (about 118 volts), plug a receiver into the "WATTS" receptacle of the Chanalyst. This receiver should be in good operating condition, and its power consumption should be determined from the serial plate on the chassis or measured with a wattmeter, if the latter is available. The power consumption of the receiver should preferably be from 75 to 100 watts. The Chanalyst wattage indicator control on the front panel should then be set so as to indicate the correct power consumption of the receiver. The adjustment is complete when the wattage indicator calibration adjustment (the 500,000 ohm control R35, mounted at the extreme right in the chassis) is set so that the Magic Eye has just closed.

When the Magic Eye in the AF Channel is replaced, adjust the AF Magic Eye Adjustment R49 as follows: With AF multiplier at "0.1" and AF level control at 10, apply exactly one volt, 400 cycle, AF at the AF probe tip (green cable). Adjust R49 to just close the AF Magic Eye.

TO CHECK THE ELECTRONIC VOLTMETER—With the two meters connected in parallel, compare readings obtained with the Electronic Voltmeter at various points in a radio set with the readings obtained at the same point with a standard d-c voltmeter (1,000 ohms per volt) of known accuracy.

The Electronic Voltmeter should deflect the same on either side of zero for equal voltages of opposite polarity. If an unbalance is observed, check the calibration at three volts after setting the electrical zero. To adjust the calibration, remove the case of the instrument and rotate the balancing potentiometer (R30) as required to make the scale reading correct. Remove the test voltage and recheck the electrical zero, making any slight adjustment of the "ZERO" control as found necessary. Reapply the test voltage and recheck the calibration as per above, then reverse the polarity (input leads) and test the calibration on the opposite side of the scale. Any unbalance may be compensated by selecting different combinations of the "ZERO" control and potentiometer R30 until an optimum one is found.

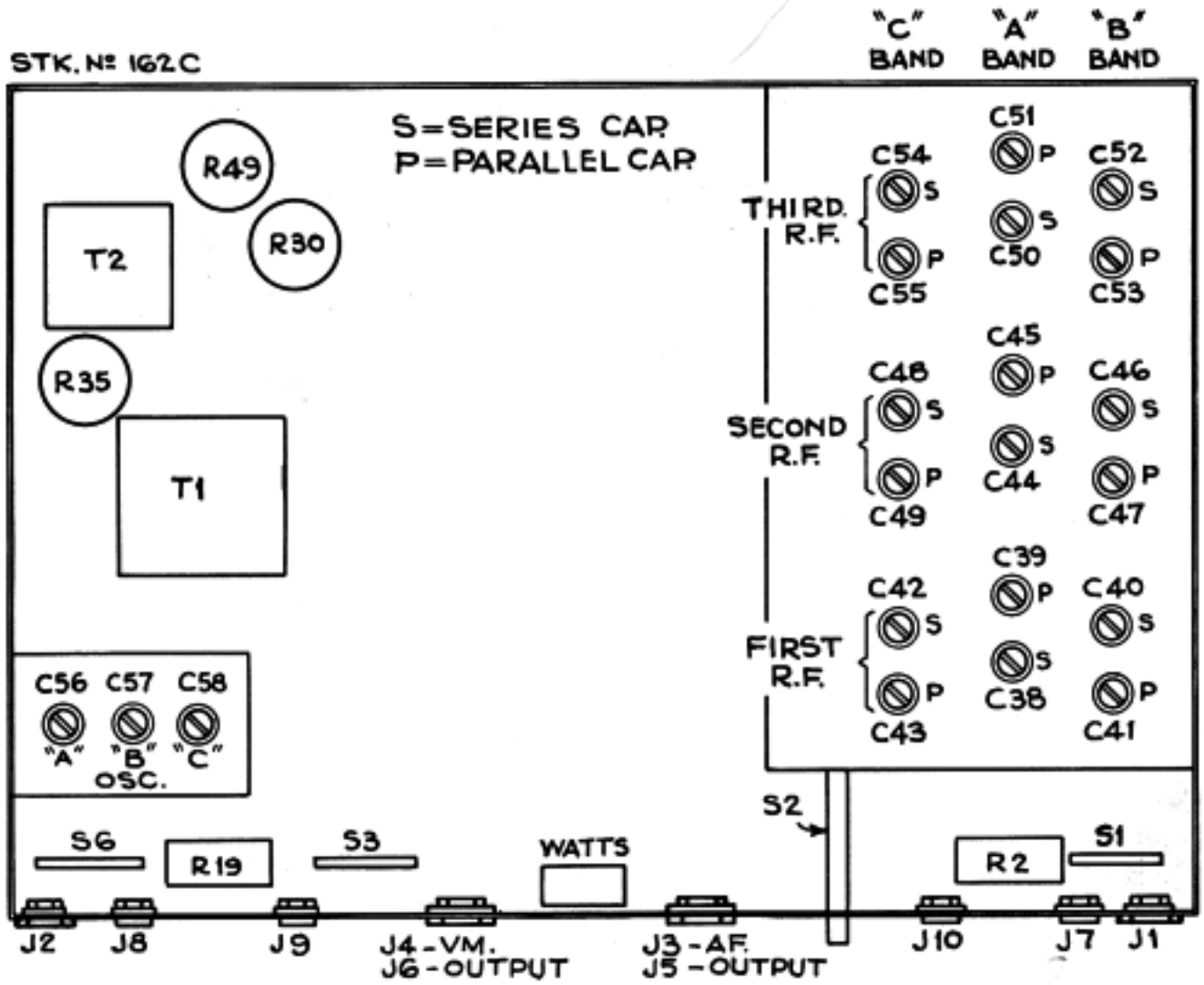

Figure 43—Trimmer and Adjustment Layout (Bottom View)

ALIGNMENT OF THE CHANALYST—Should it become necessary to align the Chanalyst, proceed as follows:

Receiving signals at the correct setting of the dial scale depends upon having the proper relation between tuning condenser setting and dial

scale. The dial pointer should be set to the low frequency end of any band.

TEST OSCILLATOR CONNECTIONS—When aligning the RF-IF Channel or the Oscillator Channel, a test oscillator should be used as the signal source and connection should be made via the "RF-IF" input jack or the "OSC." input jack, as the case may be. The output of the channel under adjustment should be read on its respective Magic Eye.

TRIMMER CONDENSERS—The slotted adjustment screws of the trimmers are accessible in the base of the Chanalyst upon removal of the chassis from its case. These trimmers are identified in the schematic wiring diagram, Figure 1 and in Figure 43, a sub-chassis view of the unit.

It is important to note the C38, C40 and C42, C44, C46 and C48, C50, C52 and C54 in the various stages of the RF-IF Channel are series coupling trimmers. Increasing the capacity of these trimmers (by turning the screw clockwise) increases the sensitivity; but, if the capacity is increased too much, the stage will oscillate. If the adjustment has resulted in oscillation, the adjustment screw should be backed off (counter-clockwise) from the point where oscillation occurs. C39, C41 and C43; C45, C47 and C49; C51, C53 and C55 are parallel-connected trimmers. The trimmers of the Oscillator Channel are C56, C57 and C58.

When aligning the RF-IF Channel, begin with the RF stage preceding the diode and work toward the input jack.

TO CHECK THE CALIBRATION OF THE RF-IF CHANNEL OF THE CHANALYST—A piezo-electric calibrator, such as the RCA Stock No. 9572, may be used to check the calibration of the dial of the RF-IF Channel of the Chanalyst. When the RCA Calibrator is used, the rf-if probe should be placed in contact with the "HI-LO" switch of the calibrator. The "RF-IF" Magic Eye of the Chanalyst should then respond at the fundamental frequencies (either 100 or 1000 kilocycles—depending on the setting of the "HI-LO" switch) and the harmonics thereof.

RCA Victor

Gain Data Instructions (2nd Edition)

—1941 No. 3—

RCA VICTOR DIVISION OF RADIO CORPORATION OF AMERICA, • CAMDEN N. J., U. S. A.

Introduction

Complete gain data is published in the Service Notes for RCA Victor radio receivers, starting with 1941 models.

For speed and convenience, the gain data is printed on the schematic diagram of each model.

For the utmost utility in signal tracing, so that any trouble may be quickly narrowed down to a single point, the gain is given for each separate RF, IF and AF tube, and also for each RF and IF transformer. In addition, the AVC voltage is shown, and also the oscillator grid voltage on all frequency ranges.

Tube Gain Is Shown With 3-Volt Fixed Bias

To provide more definite operating conditions, the R-F and I-F gain data for RCA Victor Service Notes is now obtained with a fixed 3-volt bias on the AVC bus.

To duplicate this gain data, it is necessary to connect a 3-volt bias battery temporarily to the set as indicated in the service notes. The negative side of the 3-volt battery should be connected to the AVC bus, and the positive side of the battery should be connected to the chassis. In a.c.-d.c. receivers, the positive side of the battery should be connected to the common negative wiring.

The battery may consist of two small flashlight cells connected in series.

Use of the fixed bias eliminates necessity for shorting out the AVC circuit, and minimizes difficulty due to over-loading with resultant grid current.

(A few RCA Service Notes show gain data with the AVC working, and also shorted out.)

Gain Tolerance

Several variable factors influence the gain of sections in a receiver, including **tubes,** which may vary more than 25%, **regeneration,** adjustment of the **tuned circuits, accuracy of tuning, line voltage,** and **experience** on the part of the operator.

Obviously it is impossible to specify definite receiver tolerances. Two-to-one variations may be regarded as normal.

Make Gain Checks With 600 kc Signal Fed into Antenna Terminal of Receiver

All gain checks throughout the entire receiver circuit (radio-frequency, intermediate-frequency, and audio-frequency sections) can be made with the signal generator connected to one point (the antenna terminal), and tuned to one frequency (600 kc).

This naturally simplifies the procedure and speeds up the work.

Preliminary Set-Up

Signal Generator Connections

Connect the output cable of the signal generator to the antenna and ground terminals of the receiver.

Dummy Antenna

Use the recommended dummy (usually 100, 200, or 300 mmfd. for the broadcast band) in series with the antenna terminal.

Tune Signal Generator to 600 kc

Adjust the signal generator to 600 kc, or to some frequency near 600 kc that is free from local broadcast interference.

The exact frequency is not important. If the signal generator is slightly off calibration, set it to the 600 kc mark, because both the receiver and the Chanalyst will be tuned to the actual generator frequency even though this may be slightly above or below 600 kc. In other words, the generator frequency is the starting point, and both the receiver and the Chanalyst will be tuned to it.

Use 400 Cycle Audio Modulation (30%)

Set the signal generator to give 400 cycle internal audio modulation on the 600 kc signal. The percentage of modulation is not important in making gain checks, but the standard value of 30% is recommended.

Connect 3-Volt Fixed Bias to AVC Bus

Strap two 1-½ volt flash-light cells together and connect them in series. Connect the negative to the AVC bus in receiver. Connect the positive to the chassis, or to the common negative wiring in a.c.-d.c. sets.

Tune the Receiver to 600 kc

Tune the receiver carefully for peak output on the signal (assumed to be 600 kc) from the generator.

Connect Chanalyst Ground Lead to the Receiver Chassis

Connect the clip on the end of the Chanalyst ground lead (black) to the receiver chassis. In a.c.-d.c. sets, connect the Chanalyst ground lead to the common negative wiring.

Tune RF-IF Channel to 600 kc

Place the Chanalyst RF-IF probe (red cable) on the receiver antenna terminal. Set the RF–IF controls as shown in step (1), and tune the RF–IF channel for peak output as indicated on the RF–IF magic eye.

Second Edition

Printed in U. S. A.

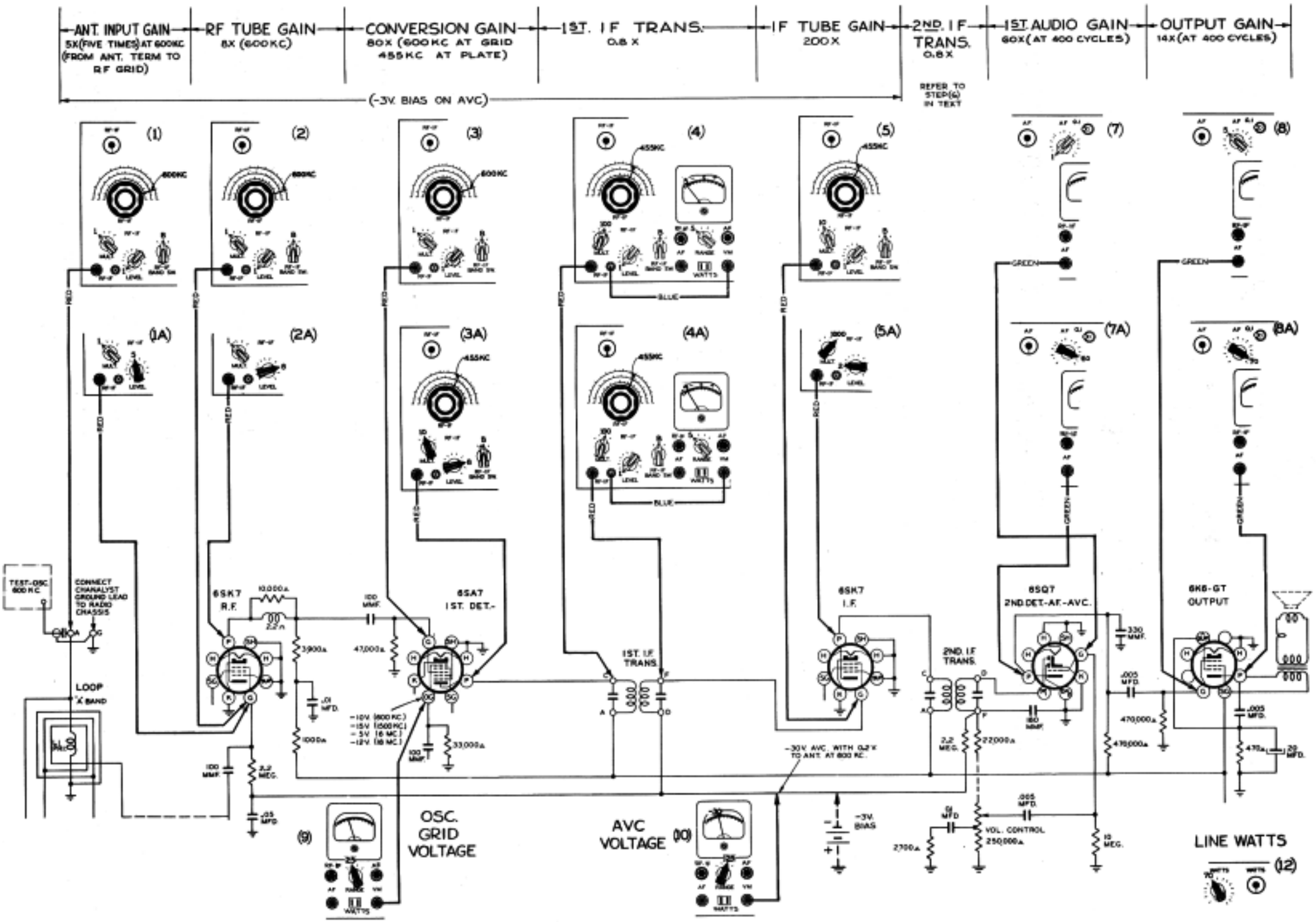
ANT. INPUT GAIN
5X (FIVE TIMES) AT 600KC (FROM ANT. TERM TO RF GRID)
RF TUBE GAIN
8X (600KC)
CONVERSION GAIN
80X (600KC AT GRID 455KC AT PLATE)
1ST. IF TRANS.
0.8X
IF TUBE GAIN
200X
2ND. IF TRANS.
0.8X
REFER TO STEP(6) IN TEXT
1ST. AUDIO GAIN
60X (AT 400 CYCLES)
OUTPUT GAIN
14X (AT 400 CYCLES)
(-3V. BIAS ON AVC)
(1)
(2)
(3)
(4)
(5)
(7)
(8)
(1A)
(2A)
(3A)
(4A)
(5A)
(7A)
(8A)
600KC
455KC
BLUE
RED
GREEN
TEST-OSC 600 KC
CONNECT CHANALYST GROUND LEAD TO RADIO CHASSIS
LOOP
"X" BAND
6SK7 R.F.
6SA7 1ST. DET.-
6SK7 I.F.
6SQ7 2ND.DET-AF.-AVC.
6K6-GT OUTPUT
1ST. I.F. TRANS.
2ND. I.F. TRANS.
-10V (800 KC.)
-15V (1500 KC.)
-5V (6 MC.)
-12V (18 MC.)
-30V AVC WITH 0.2V TO ANT. AT 600 KC.
-3V. BIAS
VOL. CONTROL 250,000Ω
(9)
OSC. GRID VOLTAGE
AVC VOLTAGE
(10)
LINE WATTS
(12)

Making Gain Checks

(Refer to drawing on facing page, which shows each step in checking a typical radio receiver.)

Step (1). Antenna Input Gain

With the RF-IF channel tuned to the 600 kc signal, and with the **level** and **multiplier** controls set at 1 and 1, as shown at (1) in the drawing, adjust the output of the signal generator until the RF–IF Magic Eye just closes (or electronic voltmeter reads–5 volts). See note under "Miscellaneous Data" about using the electronic voltmeter in conjunction with the magic eye.

Move the RF–IF probe from the antenna terminal to the grid prong of the RF tube. If there is a gain, the RF–IF magic eye will overlap. Adjust the **level** control until the eye is just closed. In this example, the **level** control has been turned from 1 to 5, indicating a voltage step-up or gain of five times from the antenna terminal to the grid of the first tube. (This is the gain from the antenna coil to the tuned loop.)

The service note for this particular model (Model 16T3) specifies an approximate gain of five times from the antenna terminal to the RF control grid. If the gain is appreciably less than specified, the tracking should be checked. The simplest and most definite method for doing this is described later.

Step (2). RF Tube Gain

Place RF–IF probe on grid of RF tube. Set RF–IF input controls as shown in (2). Adjust signal generator output until RF–IF Magic Eye is just closed.

Move RF–IF probe to plate of RF tube. Adjust **level** control until RF–IF eye just closes. If new **level** setting is 8 the gain from grid to plate is 8 times.

Move the probe to the grid of the 1st-detector tube, which is resistance-coupled to the RF tube in this particular model. There should be only a slight drop through the coupling circuit.

With a receiver that has transformer coupling between the RF and 1st-detector tubes, check the gain from primary to secondary.

Step (3). 1st-Detector Conversion Gain

Place the RF–IF probe on 1st-detector control grid and turn RF–IF **level** and **multiplier** controls to 1 and 1. Adjust signal generator output so the RF–IF Magic Eye is just closed.

Move the RF–IF probe to the 1st-detector plate. Tune the RF–IF channel for peak output on the IF signal. Adjust **multiplier** and **level** controls so RF–IF Magic Eye is just closed.

In this example (3A) the **multiplier** is turned from 1 to 10 (10 times), and the **level** control is turned from 1 to 8 (8 times). The conversion gain is therefore 80 times.

The IF signal voltage across the plate circuit of the 1st-detector tube is 80 times greater than the 600 kc signal voltage across the 1st-detector grid circuit.

If the conversion gain is appreciably less than specified, it may be due to incorrect IF alignment, but first try retuning the set for peak output. (The voltmeter channel provides an excellent output meter for this purpose by using it to measure AVC voltage.)

Step (4). Checking 1st-IF Transformer

On this set, there is a decrease or loss, instead of a gain, from primary to secondary of the 1st-IF transformer.

Place the RF–IF probe on the primary of the 1st-IF transformer and adjust the signal generator output so the RF–IF Magic Eye just closes, or so the electronic voltmeter indicates –5 volts.

Move the probe to the secondary. In this example (4A), the eye opens slightly, and the meter drops to –4 volts, indicating a loss of 5 to 4 or 0.8 times.

Step (5). IF Tube Gain

Place RF–IF probe on the IF grid. Set **multiplier** at 10 and **level** at 1. Adjust signal generator output so that RF–IF Magic Eye is just closed.

Move RF–IF probe to plate of the IF tube and adjust **multiplier** and **level** controls until eye is just closed.

In this example (5A) the **multiplier** is turned from 10 to 1000 (100 times) and the **level** control is turned from 1 to 2 (2 times). The gain is therefore 100 times 2, or 200.

Owing to the high gain obtained in the IF stage, there may be some tendency toward regeneration or oscillation when measuring IF gain. To minimize this effect, the RF–IF probe should be placed so that it does not increase coupling between the I-F grid and plate circuits.

Step (6). Checking 2nd-IF Transformer

In this particular set, the 2nd-IF transformer has the same loss as the 1st-IF transformer, and is checked as in step (4), except with **multiplier** at 1,000.

Step (7). 1st-Audio Gain

In making audio gain checks, the tone controls should be set for maximum response.

Turn Chanalyst AF control to 1 and set AF toggle switch to 0.1.

Place the AF channel probe (green cable) on the arm of the receiver volume control. Adjust the receiver volume control so the AF channel Magic Eye just closes.

Move the probe to the 1st-audio grid. There should be only a slight drop through the coupling condenser.

With the AF channel probe on the grid of the 1st-audio tube, reset the receiver volume control so the AF eye is just closed.

Move the AF probe to the plate of the 1st-audio tube. Adjust the AF channel control so the AF eye is just closed. In this example (7A) the control is turned from 1 to 60, indicating a voltage step-up or gain of 60 times.

Move the AF probe to the grid of the output tube. There should be only a slight drop through the coupling capacitor.

If the receiver has a phase inverter tube, check its gain in the same way as described for the 1st-audio tube.

Step (8). Output Stage Gain

Turn Chanalyst AF control to 5 and place AF probe on the grid of the output tube. Adjust the receiver volume control so the AF Magic Eye is just closed.

Move the probe to the plate of the output tube. Adjust the AF channel control so the AF eye is just closed. In this example (8A), the control is turned from 5 to 70, indicating a voltage step-up or gain of 14 times (5 divided into 70 equals 14).

With a push-pull (or parallel push pull) output stage, check each tube separately, with the other output tube (or tubes) removed from the set. This gives a definite check on each output tube. The published data gives the gain with all of the output tubes in operation.

On some sets, particularly AC–DC types, hum voltage on the output tube plate may be quite high, reaching values of 10 or 15 volts. In such cases, it is necessary to use a strong signal at the output grid, so that the signal at the plate will be high enough to "mask" the hum voltage. An AF Adaptor, stock No. 9907, will prove very helpful in making accurate AF gain measurements because it attenuates the 60- and 120-cycle hum components without materially affecting the 400-cycle signal. The adaptor is designed to "plug-in" between the AF cable and the AF input jack on chanalyst.

Step (9). Measuring Oscillator Grid Voltage

Checking the oscillator grid current (by measuring the rectified oscillator signal across the oscillator grid leak) is a valuable and quick method of determining whether the oscillator is working throughout the range on each band.

Connect the electronic voltmeter channel probe (blue cable) to the oscillator grid. Observe the voltage reading while tuning across each band.

The published RCA gain data gives the oscillator grid voltage at the high-frequency and low-frequency end of each band.

It will be observed that the oscillator grid voltage generally increases when tuning through stations. The published data is taken at quiet points on the dial.

"Dead spots" or points where the oscillator ceases to work may be caused by absorption due to resonance in adjacent coils through defects in shorting action of the range switch and will show up as dips in the oscillator grid voltages.

Step (10). Measuring AVC Voltage

Remove the 3-volt bias battery.

Connect the voltmeter channel probe (blue cable) to the AVC bus. Turn the signal generator from low output up to high output and observe the AVC voltage. It will be found to increase rapidly at first, and then more slowly up to an approximate maximum (in this particular example) of −30 volts.

In the published RCA gain data, the AVC voltage is given for a large input to the antenna. The specified AVC voltage may be regarded as the approximate maximum.

Checking Oscillator Frequency

Place the oscillator channel probe (brown cable) near the oscillator circuit in the receiver. Tune the oscillator channel for maximum indication on the oscillator channel Magic Eye.

The correct oscillator frequency should equal the sum of the input signal frequency plus the intermediate frequency. In this particular example, the input signal is 600 kc, and the intermediate frequency is 455 kc, so the correct oscillator frequency is 600 plus 455, or 1,055 kc.

Wattage Indicator

Plug the Chanalyst into a 110-volt a.c. supply, and plug the receiver into the Chanalyst **watts** receptacle. Turn "on" the power switches of both Chanalyst and receiver. After a brief warm-up period, adjust the **watts** control so the **watts** Magic Eye just closes. The setting of the **watts** control indicates the power consumption of the receiver.

The rated power consumption of radio receivers (as printed in service data and on the chassis or cabinet labels) is seldom accurate to within 10% of the actual consumption.

Quick Over-All Gain Checks on RF, IF, and AF Sections

The approximate over-all gain of any section (RF, IF, or AF) can be found by multiplying together the gain of the parts that comprise the particular section.

Using the accompanying diagram as an example:

The RF section extends from the antenna terminal to the 1st-detector grid. This includes the antenna transformer (which in this case has a primary coil and a loop secondary) with a gain of 5, and the RF tube, with a gain of 8. The over-all RF gain is 5 times 8, or 40.

The 1st-detector conversion gain, and the 1st-IF transformer should be checked separately.

The IF tube and the 2nd-IF transformer may be checked as one section, feeding IF signal from the generator into the IF grid.

The AF section extends from the 1st-AF grid to the output plate, and includes the 1st-AF tube and the output tube. The over-all AF gain is 60 times 14, or approximately 800.

Miscellaneous Data

Electronic Voltmeter May Be Used in Conjunction With the Magic Eye

When tuning the RF–IF channel, the electronic voltmeter may be used as an auxiliary resonance indicator, and for level checks as shown in step (4).

Connect the voltmeter cable (blue) between the VM jack and the RF–IF tip jack.

Set the **meter range** to 5, and, with no signal input to the RF–IF channel, adjust the **zero** control so the meter needle is at center zero.

When connected in this way, the meter indicates the rectified signal voltage at the **grid** of the RF–IF Magic Eye. Approximately −5 volts are required to just close the eye.

Tracking at 600 kc

In using the published gain data it is advisable to check, and if necessary adjust, the tracking between the RF tuned circuits and the oscillator circuit.

The following method is unequalled for speed and accuracy because no "rocking" of the gang condenser is necessary.

(a) Align the IF to the correct IF frequency.

(b) Feed a 600 kc signal into the antenna circuit of receiver through the specified dummy antenna.

(c) Place RF–IF probe (red cable) on grid of first tube in receiver, and tune the RF–IF channel to the 600 kc signal.

(d) Carefully turn the receiver gang condenser for maximum output on the RF-IF Magic Eye (not for maximum output on the receiver.)

(e) Leave the receiver gang in this position even though the receiver dial may indicate 10 or 20 kc off, because this is the correct setting of the gang to tune the receiver's antenna circuit to 600 kc.

(f) Connect the electronic voltmeter probe (blue cable) to the AVC circuit of the receiver.

(g) Adjust the oscillator magnetite core or low-frequency padder for maximum AVC voltage as indicated on the electronic voltmeter.

Another simple method is as follows:

Place the RF–IF probe (red cable) on the 1st-detector plate and tune the Chanalyst to the 600 kc signal.

Turn the receiver gang condenser for **maximum output** on the RF–IF "eye." Adjust Chanalyst RF–IF controls so the RF–IF eye is just closed. Adjust the oscillator core or low-frequency padder in the set for maximum **opening** of the RF–IF "eye." (The "eye" opens when the oscillator in the set is tuned to the correct point because the AVC voltage increases and this decreases the gain of the RF or 1st-detector.)

Input to Loop Receivers

Some loop receivers have a link that must be opened when feeding the signal generator into the antenna terminal.

On console loop receivers, such as RCA Model 110K, if only the chassis has been brought in for service, and the loop is not available, connect the signal generator through an .01 mfd. capacitor to the control grid of the first tube. Tune the receiver for maximum AVC voltage on the 600 kc signal.

Chanalyst Ground Connection to AC-DC Receivers

On a.c.-d.c. receivers where one side of the 110-volt line is connected to the chassis, attach the Chanalyst ground lead to the receiver chassis.

If the 110-volt line is isolated from the receiver chassis, connect the Chanalyst ground lead to the common negative wiring in the chassis.

In either of these cases it must be remembered that the receiver and the Chanalyst may be "hot," and due care must be taken to prevent grounding of either. The best method is to use an isolating power transformer as described below.

Isolating Power Transformer

When working on a.c.-d.c. receivers, it is becoming general practice to use a one-to-one ratio power transformer between the a.c. power supply and the receiver. This avoids grounding difficulties and certain hum conditions.

The isolation power transformer may be used in conjunction with the Chanalyst when testing a.c.-d.c. receivers by plugging one winding of the transformer into the Chanalyst **watts** receptacle, and connecting the a.c.-d.c. receiver to the other winding.

REPLACEMENT PARTS

Insist on genuine factory-tested parts, which are readily identified and may be purchased from authorized dealers.

STOCK No.	DESCRIPTION
35263	Cable Assembly—AF test (green)
35264	Cable Assembly—RF-IF test (red)
35265	Cable Assembly—Voltmeter test (blue)
35266	Cable Assembly—Oscillator test (brown)
46685	Cable Assembly—Interchannel (black)
47080	Cable Assembly—Ground lead complete
30314	Cap—Grid cap
12720	Capacitor—100 mmfd. (C14, C17, C36)
12694	Capacitor—220 mmfd. (C15)
12635	Capacitor—1,000 mmfd. (C24)
13762	Capacitor—1,500 mmfd. (C1)
14393	Capacitor—0.01 mfd. (C16, C18, C19, C21, C23, C28, C29, C31, C32, C37)
11315	Capacitor—0.015 mfd. (C2)
32787	Capacitor—0.05 mfd. (C25, C26, C33)
4839	Capacitor—0.1 mfd. (C4, C5, C6, C8, C9, C10, C11, C12, C13, C20)
35261	Capacitor—0.15 mfd. (C3)
47081	Capacitor—10 mfd. (C27A, C27B)
34965	Capacitor—20 mfd. (C30)
35262	Clip—Ground lead clip
35267	Clip—Clip attachment for probe
35291	Coil Assembly—A band (L1-L2-C38-C39; L7-L8-C44-C45; L13-L14-C50-C51)
35290	Coil Assembly—B band (L3-L4-C40-C41; L9-L10-C46-C47; L15-L16-C52-C53)
35292	Coil Assembly—C band (L5-L6-C42-C43; L11-L12-C48-C49; L17-L18-C54-C55)
35289	Coil Assembly—Oscillator channel (L19-C56-L20-C57-L21-C58)
46684	Condenser—RF-IF variable tuning condenser (C7)
35271	Condenser—Oscillator variable tuning condenser (C22)
35710	Connector—Flexible connector
14086	Cord—Power cord and plug
14133	Fuse—1 ampere (F1)
13210	Fuse block
23421	Jack (J1, J2, J3, J4, J5)
4924	Jack (J6)
47061	Jack—Binding jack, black (J9, J10)
35275	Jack—Tip jack (J7, J8)
46687	Knob Assembly—RF-IF
35288	Knob Assembly—Oscillator
7960	Knob—Small bar knob
4323	Knob—Zero
35277	Meter (M1)
47089	Plug—Solderless locking pin plug for ground lead
46686	Pointer and hub assembly—RF-IF

STOCK No.	DESCRIPTION
35270	Reactor (L22)
36637	Receptacle—Watts
3581	Resistor—200 ohms, ½ watt (R20)
8063	Resistor—330 ohms, ½ watt (R3, R8, R11)
30654	Resistor—1,500 ohms, ½ watt (R6, R10, R13)
35254	Resistor—1,900 ohms, 1 watt (R34)
35281	Resistor—Variable 2,000 ohms: Voltmeter balancing potentiometer (R30)
35255	Resistor—6,200 ohms, ½ watt (R29, R33)
14659	Resistor—6,800 ohms, ½ watt (R5)
35282	Resistor—Variable 9,000 ohms: RF-IF level (R2); oscillator level (R19)
46693	Resistor—Variable 10,000 ohms: Voltmeter zero (R32)
46692	Resistor—Variable 17,000 ohms: Watts control (R36)
6240	Resistor—20,000 ohms, ½ watt (R41, R44)
13669	Resistor—22,000 ohms, 2 watts (R31)
35256	Resistor—75,000 ohms, ½ watt (R21, R42)
3252	Resistor—100,000 ohms, ½ watt (R4, R7, R9, R12, R18)
3058	Resistor—100,000 ohms, 1 watt (R52)
35257	Resistor—100,000 ohms (matched pair) (R28)
30651	Resistor—270,000 ohms, ½ watt(R1, R45, R46)
35258	Resistor—300,000 ohms (matched pair) (R27)
30648	Resistor—470,000 ohms, ½ watt (R14, R15, R22, R37, R51)
35285	Resistor—Variable 500,000 ohms: Watts compensating adjustment (R35)
30652	Resistor—1 megohm, ½ watt (R17, R24, R39, R48, R50)
39989	Resistor—1.6 megohms (matched pair) (R26)
34257	Resistor—2 megohms, ½ watt (R40)
35286	Resistor—Variable 2 megohms: AF level (R43); AF Magic Eye adjustment (R49)
30649	Resistor—2.2 megohms, ½ watt (R16, R23, R38, R47)
35260	Resistor—8 megohms (matched pair) (R25)
36179	Shaft—RF-IF band switch shaft detent
35279	Socket—Tube socket (5 prong)
35280	Socket—Tube socket (6 prong)
31251	Socket—Tube socket (octal)
35274	Switch—RF-IF multiplier (S1); meter range (S4)
36178	Switch—RF-IF band switch wafer (3 required) (S2)
35273	Switch—Oscillator band switch (S3)
2034	Switch—AF multiplier (S5)
47157	Switch—Power and standby (S6)
35268	Transformer—Power transformer (T1)
35269	Transformer—Watts transformer (T2)

Note: When ordering replacement parts please give the serial number of your Chanalyst (stamped on bottom). Replacement parts supplied are within Engineering Specification Tolerances.

GUARANTEE

The RCA-Rider Chanalyst is guaranteed for a period of one year in accordance with the terms expressed on the Guarantee Card accompanying each instrument.

Printed in U. S. A.

44-28-11