INSTRUCTIONS FOR USE AND OPERATION

OF THE

Meissner

ANALYST

MODEL NO. 9-1040

MEISSNER MANUFACTURING DIVISION
MAGUIRE INDUSTRIES INC.
MT. CARMEL, ILL.

OPERATING INSTRUCTIONS

FOR USE WITH THE

MEISSNER ANALYST

General discussion of the instrument and its capabilities

The Meissner **Analyst** is a tocl for the rapid solution of difficult Service problems. It is a device to permit the rapid location of faults in defective radio receivers or sound equipment without measurements, complete voltage measurements on all tube elements, or tedious tracing of circuit wiring. The fundamental principle of the **Analyst** is that it permits the Serviceman to listen to and measure the signal as it passes through each of the components in a receiver, regardless of the level of the signal, and in spite of the fact that the signal may be at an inaudible (IF or RF) frequency. It is thus possible to tell exactly where the signal is absent or becomes distorted, quickly localizing the fault in the receiver.

The Service instruments incorporated in the device are as follows:

1. (a) An audio amplifier with phone-jack output for headphones to be used for listening to any audio voltage in the radio set.
   (b) An audio voltmeter of 2-megohms impedance with a range of 0.1 to 1000 volts.
2. A DC voltmeter with a resistance of 10 megohms covering the range 0 to 500 volts, either positive or negative.
3. (a) A frequency meter to check oscillator frequency.
   (b) A vacuum-tube voltmeter covering the range .05 to 50 volts and indicating frequency from 600 KC to 15 MC.
4. (a) A TRF Tuner with phone-jack output connections for a head set to be used for listening to the quality of an RF or IF signal.
   (b) A vacuum-tube voltmeter covering the range 50 micro-volts to 50 volts and indicating frequency between 100 KC and 1700 KC.
5. A line-current ammeter.

All of these instruments, except the D.C. voltmeter, have the additional feature of "memory," indicating any change from the previous reading. This feature makes the solution of intermittent faults simple since the indicators can be set for the operating conditions in the receiver and when a fault occurs, the indicator concerned with the fault will immediately indicate the changed condition.

The **Analyst** is a great aid in locating the trouble in a receiver but it is the Serviceman who must utilize his knowledge of radio theory, **Analyst** performance, and his "trouble-shooting" ability to isolate the offending component, defective joint, short circuit or other cause of trouble, after the **Analyst** has helped him to localize the fault as occurring between two points electrically close together in the circuit. It is recommended that the following material be studied slowly and thoroughly so that the use of each part of the equipment may be completely mastered.

SHIELDED CABLES AND PRODS

In order to make connections between the various sections of the **Analyst** and the corresponding points in the receiver without introducing regeneration, convenient shielded leads have been provided with appropriate plugs on one end and probes on the other.

In order that the shielded leads may be used to make connections to various parts of the circuit in a receiver without seriously disturbing circuit performance, special isolating or limiting resistors or condensers have been built into the prod handles. The special circuit elements incorporated together with the identifying color code on the prods are given in the following table:

Section	Circuit in Prod Handle	Prod Handle Code
Audio	Direct Connection	Black—No Stripe
Voltmeter	1-Megohm resistor	Black—One Blue Stripe
Oscillator	1-MMF condenser	Brown—No Stripe
RF - IF	1-MMF condenser	Black—Two Red Stripes

The cables themselves have a colored tracer to correspond to the color-coding of the handles.

THE AUDIO CHANNEL

The Audio Channel, located at the top right-hand side of the panel, consists of a single-stage audio amplifier, an attenuator, a diode voltmeter and an electron-ray voltage indicator, together with associated controls and terminals.

The Audio Amplifier, which is essentially flat in its frequency characteristic throughout the entire audible range, may be used to energize a high-impedance head-set for listening to audio voltages, may be used as a voltage amplifier to drive a cathode-ray oscillograph or may drive its associated diode voltmeter to indicate audio voltages with the aid of the associated indicator tube and attenuator.

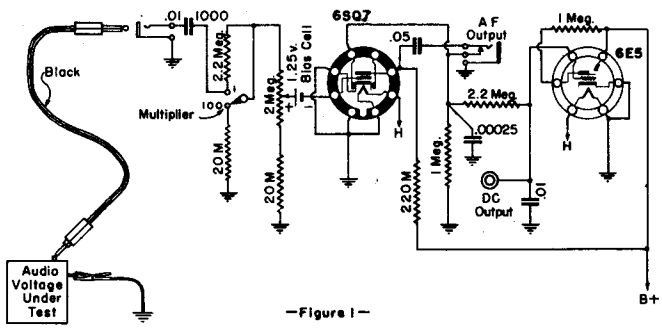

—Figure 1—

The circuit diagram of this channel is shown in Figure 1. A 6SQ7 tube is used as an amplifier and diode rectifier and a 6E5 electron-ray tube controlled by the rectified voltage from the 6SQ7 is used as an indicator. A two-position multiplier and a resistance attenuator permit operation of this channel over a range of 0.1 volt to 1000 volts AC.

Signals are introduced into the Audio Channel through a shielded cable which plugs into the jack marked **Input** in the upper right-hand corner of the panel. If the Audio Channel is used to check the frequency characteristics of an amplifier, it should be remembered that, while the amplifier itself is flat in the audible range, the input cable has a capacity of approximately 125 mmfd. which will reduce the high-frequency response of any circuit having an impedance approaching or exceeding ½ megohm. For all other purposes the capacity of the input cable can usually be neglected. If the voltage being measured is great enough to work the indicator when the Oscillator or RF-IF cable is used in place of the Audio cable, the above limitation on high-frequency response is no longer effective since the input capacity of the Oscillator and RF-IF cable is only 1 mmfd. which will not disturb a normal audio circuit of even unusually-high impedance. In this case, however, a false lack of low frequencies will be indicated.

If headphones are connected to the output of the amplifier to listen to an audio voltage applied to the input of the **Analyst** the phones should be of the high-impedance type (Crystal preferred). Low-impedance phones will fail to reproduce low frequencies, particularly hum frequencies. When the phones are plugged into the output jack, the diode is automatically disconnected from the amplifier to eliminate the distortion it would otherwise produce.

The rectified current from the diode is filtered and applied to the grid of the 6E5 indicator tube at the right of the panel. This voltage-measuring device, combined with the Attenuator and Multiplier switch, makes it possible to compare the voltage of two audio signals, thereby determining the gain or loss between two points. The rectified DC voltage at the 6E5 grid appears at the pin-jack at the right side of the panel for measurement with the Electron-

ic Voltmeter, if it is desired to extend the voltage range of the Audio channel.

The Audio section can be used in many ways for testing audio systems because of the following features: The high input-impedance, 2 megohms, together with an output-impedance which matches high-impedance headphones or an oscilloscope input, makes listening or visual tests possible at any point in the audio system without disturbing its operation.

Tone quality can be tested at a diode detector output, or at the plate of a bias or grid-leak detector, whereas the direct connection of phones or oscillograph terminals might cause considerable change in detector characteristics.

The low distortion and wide frequency range enable the operator to check tone quality with confidence that no frequency or harmonic distortion is occurring in the **Analyst.**

The wide frequency range, combined with the electron-ray indicator, enables tests to be made above and below the audible range. Voltage variations of low frequency will cause the edge of the indicator-tube shadow to waver, flicker or blur, depending on the frequency. 60— or 120 — cycle hum will cause a blurred shadow on the indicator, and can also be heard in the headphones. Frequencies above the audible range to approximately 50,000 cycles will close the shadow smoothly in the normal manner, when the proper Attenuator and Multiplier adjustment is made, but the signal will not be audible in the phones.

The extreme range of overall amplification or attenuation will change an audio voltage ranging from 0.1 to 1000 volts to normal ear-phone volume, and make headphone listening tests possible anywhere in the audio system from the detector to the output plates of high powered amplifiers. Hum voltages and A. C. voltages over the same range can also be measured. The accuracy of voltage measurements is not as good as with ordinary A. C. voltmeters, but this channel permits AC voltage measurements to be made in high-impedance circuits where such measurements would be impossible with ordinary AC meters. The accuracy is sufficient for gain and hum measurements, and for approximate measurement of power-transformer voltages. The stability of the circuit and sensitivity of the indicator are such that balance of high-voltage secondaries, phase-inverters and push-pull stages can be measured very accurately.

An additional convenience of the Audio section is that, when used with an oscilloscope, the signal level can be adjusted for a satisfactory picture size, regardless of the voltage being observed.

ELECTRONIC VOLTMETER

The Electronic Voltmeter channel, in the upper left-hand corner, incorporates a voltmeter tube, 6C5, a voltage divider system, and a D.C. Voltmeter.

Four voltage ranges are provided: 0 to 5, 25, 125 and 500 volts, positive or negative with respect to the ground clip of the Analyst. A four-position switch, located at the left of the meter, selects the range required. The fact that positive and negative readings are available will facilitate taking voltage readings at any point in the receiver with a single probe, regardless of polarity. The ground connection, which is clipped to the chassis, provides the return circuit for the Voltmeter.

The input resistance of this instrument on all ranges is 10,000,000 ohms so that all DC operating and control voltages may be measured directly at the tube elements while the receiver is in operation, without such operation being affected by the measuring device.

The operation of the Electronic Voltmeter Channel is explained by reference to Figure 2. The blue-coded test lead, having a 1-megohm resistor in the handle, is plugged into the input jack on the Voltmeter panel. The resistor is included so that grid biases can be measured directly at the tube grids, without affecting any R. F. or audio voltages that may be present. Connect the ground clip (at end of rubber covered wire) to one side of the voltage to be measured, usually the negative, such as the receiver chassis. Touch the blue prod to the ground clip and adjust the "Zero Set" control for a zero reading on the meter. Then set the "Range" control to a suitable value to cover the voltage to be measured. Touch the blue prod to the other terminal of the voltage being measured (such as B-plus or AVC) and read the voltage on the meter.

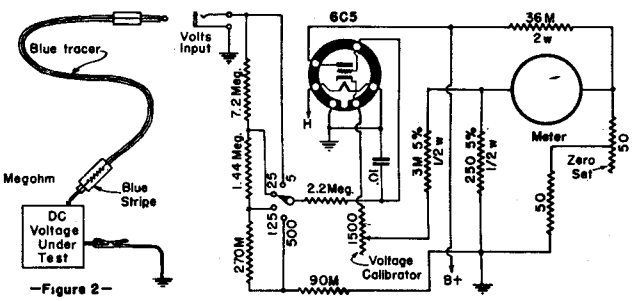

—Figure 2—

The accuracy of the instrument is practically independent of normal changes in line voltage and of changing characteristics of the voltmeter tube. The voltmeter tube is used in a degenerative circuit which acts as follows: When a given voltage is impressed on its grid, a change in voltage across the cathode resistor takes place which is nearly equal to the voltage applied to its grid. It is this difference between grid voltage and cathode voltage which is measured by the meter. This allows a linear calibration of the meter scales; that is, the meter needle deflection is exactly proportional to the voltage being measured.

The adjustment of the "Voltage Calibrator" and "Zero Set" are fully explained in the Appendix. Due to line-voltage variations it may be necessary occasionally to adjust the Zero Set control, which for convenience is located on the panel.

The large range of voltage scales and the high resistance of the Electronic Voltmeter make it a very useful instrument. Some of the voltages which cannot be measured with an ordinary voltmeter without changing circuit conditions are A.V.C. voltages, plate voltages in resistance-coupled amplifiers, grid voltages, and bias voltages that are obtained from the negative side of the "B" supply through a resistance-capacity filter. All of these can be measured with the Electronic Voltmeter with an accuracy comparable to that obtained with an ordinary voltmeter when measuring voltages from low-resistance sources. The Electronic Voltmeter obviously can also be used for measuring any other D.C. voltages in a receiver.

OSCILLATOR CHANNEL

The Oscillator Channel, consists of a single stage of tuned R. F. amplification covering a frequency range of 600 Kc to 15,000 Kc, coupled to a diode voltmeter tube and an electronic indicator tube. High gain is achieved in the amplifier by the use of a 6AC7 (television) amplifier tube. The centrally-located tuning dial operates the single-gang tuning condenser which tunes the amplifier, while the Range switch at the left selects the frequency range desired. The circuit diagram, which is so simple that no explanation is necessary, is shown in Figure 3.

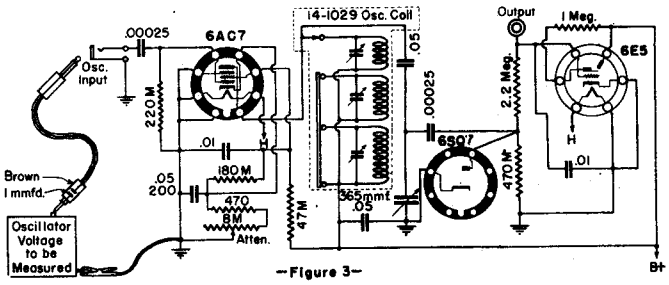

—Figure 3—

The oscillator channel can be used to measure and compare oscillator voltages and frequencies. It will show whether or not the oscillator of a receiver is operating, and the frequency at which it is working. It will show the presence and frequencies of parasitic oscillations if they are within the tuning range of the amplifier.

This ability of the Oscillator channel to measure the frequency of an oscillator is often of considerable utility in solving service problems since it is possible for an oscillator to change frequency, thereby stopping reproduction of the signal from a given station, yet the oscillator may continue to oscillate showing grid current as in the normal manner. In the case of intermittent receivers, sometimes this shift in oscillator frequency is the only clue to the de-

fective component.

In order to make connections from the oscillator circuit to the input of the oscillator channel a shielded cable is provided that has as its end a special prod having a built-in series capacity of only 1 mmfd. This series capacity is used to limit the de-tuning of oscillator or R. F. circuits when the prod is connected thereto. The small capacity reduces the amount of voltage that would otherwise reach the grid of the first tube in the Oscillator channel and is the reason why a high-gain amplifier must be used to obtain adequate sensitivity of indication.

When it is desired to check an oscillator frequency, usually enough voltage can be picked up from the oscillator if the prod is held close to the stator terminal of the oscillator tuning condenser without actually touching the terminal, meanwhile tuning the Oscillator channel dial until there is a slight flicker of the indicator shadow. It is to be noted that some oscillators have strong harmonics and indications of voltage may be obtained at several frequencies that are integral multiples of a given base frequency. The true oscillator frequency is the lowest frequency in the series and is equal to the difference in frequency between any two adjacent harmonics.

In checking an intermittent receiver for possible oscillator shift, the test prod is clipped to the stator of the tuning condenser and the receiver is adjusted to compensate for the added capacity by tuning the receiver slightly higher in frequency than its previous setting. The dial of the **Analyst** is then adjusted to resonance and the Attenuator set so that the indicator tube shadow just closes. If the oscillator shifts frequency, the shadow will spread out until the Oscillator channel dial is re-tuned, in which case, when the shadow angle is again zero, the dial of the Oscillator channel will indicate the new frequency.

If the oscillator voltage decreases, but its frequency does not change, the shadow angle will increase when the voltage changes but re-tuning alone will not return the shadow angle to zero. If the voltage increases but the frequency does not change, the bright areas on the indicator tube will overlap. When such a condition exists the Attenuator should be adjusted until there is a small shadow angle, and the Oscillator channel dial turned to see if maximum signal occurs at any other setting as indicated by the shadow closing. If the shadow does not close at any other position of the dial, there obviously has been no shift of oscillator frequency.

R.F.-I.F. CHANNEL

The RF-IF channel is a high-gain three-stage tuned RF amplifier employing three 6SK7 tubes. This amplifier is followed by a diode voltmeter tube and an electronic indicator tube. The signal is fed to the input jack through the special input cable, and full control of the level is provided by a four-position capacitive "Multiplier" and a resistive "Attenuator". Three frequency ranges are provided, selected by the "Range" switch. The bands covered are 600 to 1700 kc, 240 to 615 kc and 95 to 250 kc. The rectified output is available at the output jacks through suitably designed circuits so that headphones may be used to determine the quality of the signal at the point under examination, or oscillographic examination may be made. The D. C. component of the output is solely dependent upon the carrier voltage and the Attenuator setting, and is not affected by the percentage modulation of the signal. The audio component will depend on the percentage modulation, in addition to the factors that determine the D. C. output. Both A. C. and D. C. components appear at the phone and pin jack marked "Output."

The coils for this channel are contained in a fully-shielded compartment beneath the chassis. The three coils for each stage are located in an individually-shielded section of this assembly in conjunction with their associated switch wafers, trimmers, by-pass condensers and connections to the corresponding tube socket. All connections are made as short and direct as possible to provide the utmost in electrical efficiency.

As shown in Figure 4, the signal enters the system through the small condenser in the probe handle. The capacity of the conductor in the cable to ground, plus circuit capacities is approximately 150 mmfd. This capacity is in series with the small capacity in the probe, so that a small fraction of the voltage at the prod tip is impressed on the 6SK7 grid when the Multiplier switch is in position 1. In position 10, additional capacity is added to the circuit, which makes the voltage applied to the grid 1/10 of that in position 1. Positions 100 and 1000 similarly decrease the portion of the test voltage which is applied to the tube grid. Variable resistance "R" is a cathode-bias control, which varies the gain of the first amplifier tube over a 1 to 12 range. The gain of the second and third tubes of the amplifier is constant. The output of the amplifier is detected by the 6H6 diode, and the rectified voltage is passed on to the output jacks and the grid of the 6E5 electron-ray indicator tube.

When measuring a given signal, constant amplifier output is maintained by adjusting the Multiplier and cathode-bias Attenuator until the indicator shadow is just closed, at the same time tuning the resonant circuits to the signal frequency. The number on the Attenuator multiplied by the Multiplier setting then gives the relative voltage of the measured carrier. The frequency is indicated on the gang condenser dial. The Multiplier and Attenuator are not calibrated in microvolts, but a signal which just closes the eye with Multiplier and Attenuator both set at 1 is approximately 5000 microvolts. Because the input capacity of the prod is so small, it has a negligible de-tuning effect on any circuit to which it may be connected.

The sensitivity of the amplifier can be increased approximately 100 times by using the direct-connected (audio) prod. The use of this lead will disturb tuned circuits, but it is satisfactory for checking antennas, or antenna coils, if the de-tuning effect is compensated for by re-tuning the gang condenser of the receiver.

The RF-IF section is useful for checking gain, distortion and noise in the R.F. or I.F. portions of receivers. It enables one to make listening tests at any point in the receiver ahead of the detector, or to make visual tests by means of a cathode-ray oscilloscope. If higher audio output is required than is furnished by the RF-IF channel, the audio prod may be inserted in the pin-jack at the right of the RF-IF section, and the signal amplified by passing through the amplifier in the "Audio" channel, the output being obtained from the output jack of the "Audio" channel. The voltage range can be increased by plugging into the pin jack, the test prod of the Electronic Voltmeter and observing the meter of the Electronic Voltmeter instead of the indicator on the RF-IF section itself.

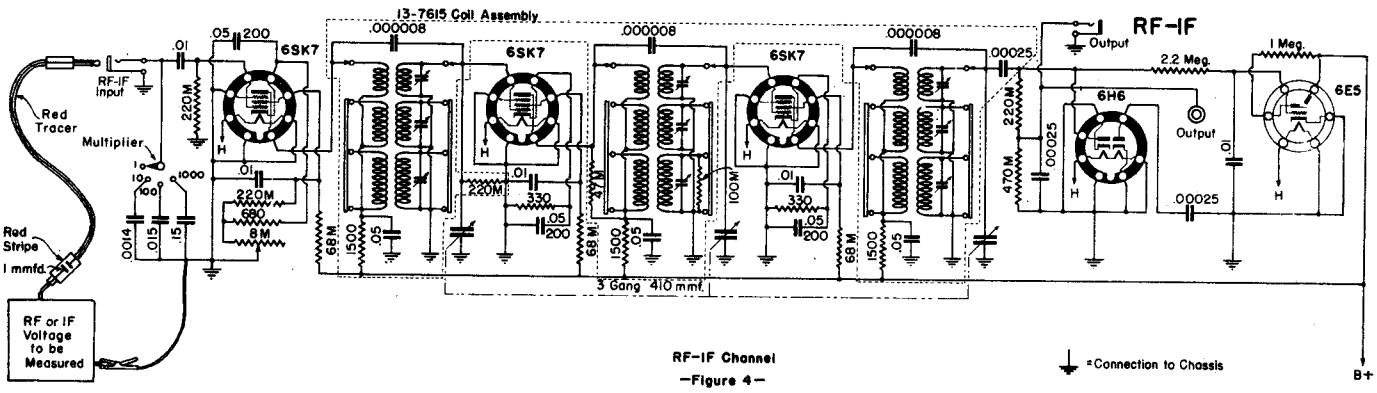

RF-IF Channel
—Figure 4—

LINE CURRENT CHANNEL

The Line Current channel, at the bottom of the panel, consists of a current transformer, a calibrated attenuator, a diode voltmeter tube and an electronic indicator tube. The circuit is shown in Figure 5.

This channel is automatically placed in operation when the receiver under test is plugged into the A. C. receptacle at the left of the panel. A current transformer that converts the relatively high current at almost zero voltage drop to a much higher voltage, impresses this voltage across the attenuator network actuating the diode voltmeter tube and the attached electronic indicator. The calibrated resistive Amperes control provides the current reading directly, when the control is set to just close the shadow on the indicator. The current range is from 0.3 to 3 amperes which will cover practically any type of receiver.

Where the name plate on the receiver indicates only the wattage of the receiver, the current that the receiver should draw can be calculated approximately from the following formula: Current equals wattage divided by nine-tenths of the line voltage.

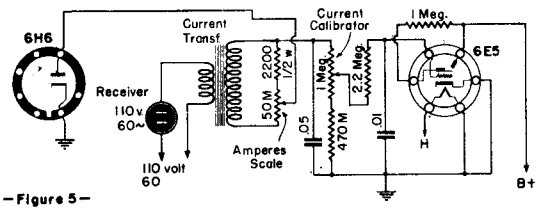

—Figure 5—

The nine-tenths factor is used because of the power factor of the average receiver. A close approximation, which is much more convenient to use, is to divide rated watts by 100 to obtain line current in amperes or decimal fraction thereof.

ACCESSORIES

The most valuable accessory for use with the **Analyst** is a high-quality head set of the high-impedance type. The most ideal type is the crystal headset which has very high impedance and at the same time has much better fidelity than the conventional magnetic type. For this reason the former type is highly recommended. The price is relatively low so the Serviceman should, if at all possible, obtain a pair in order that he may get the best performance from his **Analyst.**

The second useful accessory is a cathode-ray Oscillograph, but if the Serviceman does not already have one, he is hardly justified in purchasing one exclusively for the benefit that he will get from its use in conjunction with the **Analyst.** The high-quality headset is far more important and will give him much more information about the receivers under test than will the oscillograph except in a few rare cases.

An ohmmeter, which practically every Serviceman has, is practically a necessity in service work. Strictly speaking, it is not an accessory to be used with the **Analyst**, but is the one additional instrument that must be employed to find the faulty component in the receiver after the **Analyst** has indicated that the trouble lies in a certain very restricted part of the receiver.

Servicing with the Meissner Analyst

TESTING ROUTINE

The Meissner **Analyst** is a powerful tool for the solution of service problems but for greatest utility and maximum saving of time in diagnosing troubles in receivers, a **definite systematic method of use should be adopted.**

Some successful servicemen attribute much of their success to little extra precautions taken to show that they realize the value of the receiver in the eyes of their customers. One such practice is to return the receiver in as neat and clean a condition as possible with the expenditure of a few moments with a dust cloth or a vacuum cleaner. If this, or other practices designed to promote repeat business are judged desirable, it is well to finish them first before starting on the testing and repair routine so that when the repair work is finished nothing further need be done that might accidentally disturb any of the adjustments made on the receiver.

The most logical first investigation of a receiver concerns the source of energy to operate it, for without the proper energy, no radio set can operate properly.

The second step is to trace the signal, step by step, until the fault is localized to a particular section of the receiver.

The third step is to find the actual defective or abnormal circuit element and restore it to its normal condition.

The fourth step, used by some Servicemen who guarantee their work for a reasonably long period of time, is to replace any item which their experience has shown them is quite likely to fail soon in a set of that particular make and age, or to replace any item that show signs of weakness leading to early failure.

The fifth step is to align the receiver or make any other obvious necessary adjustments to insure best performance for the maximum length of time.

POWER SUPPLY

In accordance with the above outline testing routine, the power supply is tested first.

If the receiver is an AC model of the same frequency and voltage as the **Analyst** the name plate of the receiver should be inspected to determine the normal line current, or normal watts input, while the **Analyst** is warming up. The expected normal current, if not specified, can be quickly estimated closely enough by dividing the rated watts by 100. The "Amperes" control on the **Analyst** should be set to a value approximately twenty percent higher than the expected normal current and the receiver power cord plugged into the power receptacle at the lower left-hand corner of the panel. The receiver should be turned on, meanwhile watching the indicator tube in the Line Current channel.

If the indicator shadow closes and the bright areas in the indicator tube overlap, the receiver is drawing more than normal current and probably has a defect either in the power supply itself, or in some part of the receiver that is placing a heavy load on the power supply. It is hardly necessary to advise turning off the receiver **immediately** to avoid further possible overload on the tubes or other components.

If the indicator shadow changes but little when the receiver is turned on, the receiver is drawing much less than its rated power, which will usually mean either that the rectifier tube is burned out, dead or not making contact, or that there is an open circuit in the power supply. Perhaps the speaker plug is not making contact, the speaker field or a filter choke may be open or some other similar circuit interruption may be responsible for the small load on the power transformer.

In the case of excessive current input a convenient quick check is to remove the rectifier tube so that when the power is next turned on, the only load on the power transformer will be the tube filaments, dial lights and transformer iron losses. These combined loads usually do not reach one-third of the full-load current. If there should be a short circuit in the power transformer, it is quite likely that the input current with the rectifier removed will be nearly equal to the normal current.

The most usual location of failure is in the high-voltage winding itself. When this occurs, the two halves of the high-voltage winding usually show decidedly unbalanced voltages. The suspected unbalance can be quickly checked, using the Audio Channel in the **Analyst** to measure first one side of the high-voltage winding, then the other.

The combination of high input-current with the rectifier or all tubes removed, and unbalanced high-voltage output is a sure indication of power transformer trouble. A final check is recommended before removing the power transformer as defective. In the final check, all connections from the power transformer to the set, except the primary, should be disconnected. If the input current is still excessive with all connections open (except the primary), the power transformer is defective, and must be replaced.

There are only two conditions under which a good transformer with no load on any secondary winding can draw excessive primary current:

1. Operating on a frequency lower than that for which the transformer was designed. As, for example, a 60-cycle transformer operating on 25-cycle current.
2. Operating on a line voltage considerably in excess of the voltage for which the transformer was designed, as for example, a 120-volt transformer operating on 220 volts.

If the name plate on the receiver is read carefully there should never be any mistake made because of either of these conditions.

In the case where a very low input current is drawn, the rectifier tube should be checked for possible burned-out filament, which is quickly done by visual inspection of glass tubes to see if the filament is glowing or by feeling the temperature of the metal envelope in the case of metal rectifier tubes, or by testing the filament for continuity in the usual manner.

In the case of a burned-out filament, it is logical to expect an unusually heavy load on the rectifier in the form of a short circuit or other defect in some component that has a relatively high voltage impressed thereon.

If the set has been idle for a long time before the defect developed, it is not unlikely that the electrolytic condensers have lost a large part of their film formation, and that excessive current was drawn from the rectifier in an attempt to form the film up to the normal operating voltage of the condensers. This phenomenon is usually much more pronounced in wet electrolytic condensers than in the dry type. The condition of the electrolytic filter condenser should be determined with a condenser test set or an ohm-meter (observing proper polarity) and condensers that have lost most of their film formation should be replaced. After checking the electrolytic condenser, the entire "B" circuit should be checked for a possible short circuit by measuring its resistance to ground with an ohm-meter. A short circuit is immediately obvious from the meter indications, and can be hunted without endangering the new rectifier tube if the entire "B" circuit is checked carefully while noting the resistance from plus "B" to chassis.

When the current input is abnormally low, the rectifier tube may have lost its emission and should be tested or temporarily replaced with another tube known to be good. If the tube is good and still low input current is drawn there is an open circuit in the "B" supply which must be traced until the open circuit is found and corrected. In this testing, it is convenient to use the Electronic Voltmeter which is a part of the **Analyst**.

If the receiver is not AC operated, the power source should be checked in any manner appropriate to the type of power supplied.

SIGNAL TRACING

It has already been explained that the fundamental idea in the use of the **Analyst** is to trace the signal through a radio receiver to check its strength and quality at each point at which the signal appears.

Starting from an antenna providing a program from a local station or a signal generator providing a constant note test signal, the operation of the antenna coil (on the long-wave or broadcast band) can be checked by connecting the RF-IF section of the **Analyst** first to the antenna, then to the high-potential side of the first tuned circuit, noting the difference in voltage at the two points.

Actually in making the above test, the voltage is measured between chassis and grid and between chassis and antenna. The ground clip of the **Analyst** is therefore attached to the chassis of the receiver and the RF-IF prod touched first to the antenna, the Attenuator and Multiplier set to the lowest numbers to give greatest sensitivity to the TRF amplifier and the dial tuned to pick up the signal. Resonance may be found either by listening with headphones in the output jack of the RF-IF channel or by observing the associated indicator tube. When the prod is first transferred to the high-potential side of the first tuned circuit, it will be necessary, of course, to tune the receiver to the frequency of the signal if that operation had not previously been done. In a rapid test, the audible difference in output between the antenna and the first grid will probably be an adequate indication of proper performance of the circuit but if more accurate information is desired, the Attenuator can be set to just close the indicator tube shadow during each test and the Attenuator setting observed, and dividing the larger Attenuator setting by the smaller will give the approximate stage gain.

In a TRF receiver this process is followed from the first grid to the detector, checking gain and quality at each step.

In a superheterodyne, the same procedure is followed up to the Mixer grid. In the very popular two-gang receivers the first grid is the Mixer grid and consequently only one test at RF is possible. If the receiver has a three-gang condenser, using an RF stage, the gain should be checked from antenna to RF grid and then to Mixer grid. Three-gang receivers without an RF stage employ a pre-selector which may be analyzed either in one step or in two, which ever seems most desirable. Usually it will be found expedient to analyze this circuit with only one step since there is usually little that fails in a pre-selector circuit. If the results look peculiar, the measurement of gain from the antenna to the first tuned circuit can be made to verify any peculiar results found on the over-all measurement of the complete pre-selector circuit. Superheterodynes with four-gang condensers are somewhat rare but can be analyzed in a similar fashion up to the Mixer grid.

In a TRF receiver, the signal reaches the detector before changing its frequency, after which the signal is in the audible range and another part of the **Analyst**, the Audio section, must be used for further analysis, but in a superheterodyne, the frequency of the signal changes in the Mixer tube, coming out at intermediate frequency (if at all) and this frequency is still in the range of the RF-IF section of the **Analyst** but at a different place on the dial.

The probe should be held on the first IF grid and the RF-IF tuner dial and range switch rotated to the approximate frequency of the IF amplifier, if the frequency is known, or the intermediate frequency may be determined by tuning until the signal is picked up. In either case, the tuning should be adjusted for maximum response, and the Attenuator on the RF-IF section adjusted to give appropriate sensitivity. It is to be noted that in the output of any Mixer there are at least four frequencies, the signal, the oscillator, the sum of the two and the difference between the two. If the set is badly out of alignment, one or more of the undesired frequencies may be picked up. It is well, consequently, to listen to the signal selected, and to observe its frequency to be sure that the correct frequency has been selected. The amplified signal (which is not the desired signal) is easily recognized because it is picked up at the same setting that was employed in testing the antenna. The oscillator is easily identified by its lack of modulation and the sum frequency is usually so high that it will not be found. The difference frequency, which is the desired frequency, is the only frequency except the signal frequency that is likely to be picked up **and that has the same modulation as the signal**. Having properly adjusted the **Analyst** to the intermediate (difference) frequency, the signal should be traced through the IF amplifier to the second detector.

Should the signal fail to appear at the first IF grid, the failure to appear may be due to a failure of the Mixer to deliver any IF signal to the IF transformer, or because it delivers the **wrong intermediate frequency**, or because a failure prevents the transformer from delivering the signal. The simple tests to diagnose trouble in the Mixer circuit are discussed in the section on "Mixers."

If the Mixer and oscillator are functioning properly and the input IF transformer is satisfactory as evidenced by the presence of a signal on the first IF grid, the signal should be traced through the IF amplifier to the detector.

If the signal voltage can be traced through the receiver to the second detector, the RF-IF and the Oscillator sections of the **Analyst** have served their functions properly. Further tracing must be done with the Audio channel of the instrument. The latter portion of the instrument consists of an attenuator, amplifier, and voltmeter tube as described in the first part of this book. With it, the signal can be traced from the second detector through all parts of the audio system even to the voice coil. In some receivers it has been found that the signal was clear and undistorted at the voice coil terminals, but the sound reproduced by the speaker was badly distorted. The ability to trace the signal right up to the voice coil thus quickly established the fact that the trouble was not in the receiver at all but happened when the electrical impulses were converted into sound by the speaker.

The above description of tracing a signal through a receiver has pointed out a few of the troubles that might occur, but has not attempted to describe any particular

case of trouble and its method of solution because if the Serviceman can locate the site of the trouble by finding the place where the signal either disappears, gets weak, or becomes noisy or distorted, it is assumed that the **Analyst** has performed its chief function. The location of the actual circuit defect such as an open or short circuit, a leaky condenser, a defective volume control or the like is the part of the operation where the Serviceman must use his knowledge of circuit theory and of service failures to help him locate the item. Obviously, all of the possible service troubles, nor even a reasonably large percentage of them, can be described in detail with examples given, but some of the most common faults in each of the representative circuit elements are given in the following pages.

ANTENNAS

The performance of an antenna can easily be checked with the **Analyst** either as to its ability to pick up an adequate voltage of the desired frequency, or as to the amount of noise picked up. The RF-IF section of the **Analyst**, as explained previously, is a three-gang TRF receiver (without antenna coil) but with an audio amplifier and output meter (tuning indicator) attached. To obtain maximum sensitivity in testing an antenna, the black-coded (Audio) test lead is used to connect the antenna to the RF-IF section of the **Analyst**. The ground lead may be connected to any convenient ground connection, or it may be left unconnected, in which case the power lines act as a ground which is a very common practice when installing receivers. The tuning dial is then rotated to tune in the desired station, and the Attenuator and Multiplier manipulated to just close the indicator shadow if an accurate idea of the signal strength is to be obtained. In some cases where there is a strong station of undesired frequency in operation when the test is made, there may be modulation of the desired signal by the strong undesired signal because there is no preselection ahead of the first tube in the RF-IF test channel. Usually this will not greatly interfere with measurement of pickup, however.

ANTENNA COILS

Antenna coils, of themselves, are rather simple devices, unless there are image-suppression circuits incorporated in them. Their causes of trouble are simple and easily recognized. Their characteristics are sufficiently uniform to permit easy recognition of a defective unit. Their normal gain in a household receiver is from 3 to 10, and in an auto radio, from 8 to 40, the latter high gains being obtained from coils with low-impedance type coupling means such as a tap on the secondary a few turns from the bottom end of the coil, or such as the low-impedance capacity-coupled type frequently referred to as "Hazeltine" antenna coils.

The most common causes of antenna coil trouble are:

1. Burned out primaries due to lightning striking the antenna or due to the antenna falling across an uninsulated power line.
2. Broken leads from the windings to the lugs caused by excessive vibration or by actual movement of the lugs.
3. High-resistance secondaries due to broken strands in Litz-wire windings, where used.
4. Shorted windings or lugs due to poor placement of leads during the manufacture of the coil, or due to poor workmanship and inspection during the assembly of the receiver, or due to foreign metallic particles lodging between lugs or bare conductors causing the short circuit.

The circuit may fail to perform properly due to conditions external to the coil such as the following:

1. AVC condenser open, thereby preventing the circuit from tuning.
2. Shorted cathode by-pass condenser or other fault removing the bias from the tube thereby permitting current to flow due to "Contact Potential" and putting a load on the tuned circuit.
3. Leakage or short circuits from grid to any other element in the tube or to ground.
4. Broken connection or defective range switch interrupting the tuned circuit.
5. Shorted gang condenser or trimmer.

The **Analyst**, a signal source, and an ohmmeter should permit the rapid solution of any of the troubles listed above.

It is important to realize the difference between testing the antenna coil itself, and testing the coil with respect to the performance of the remainder of the receiver. In testing the coil without reference to the remainder of the receiver, the RF-IF section of the **Analyst** is first tune accurately to the signal source when the prod is connected to the signal source, and then when the prod is connected to the tuned circuit, the **receiver dial** is tuned for maximum response on the RF-IF indicator tube, not for maximum response from the receiver. When the receiver is tuned for maximum response, and the receiver is a superhet, the oscillator and the IF system will determine the tuning almost irrespective of the antenna coil performance, therefore if the oscillator coil is not tracking well with the antenna coil, the latter coil will be as badly mis-tuned as the oscillator is mis-tracked, and a gain measurement under such conditions will not do justice to the possible performance of the antenna coil.

TUBES

A consideration of the methods of testing the first tube in the receiver opens up the entire subject of tracing signals through tubes of all types. There are a few fundamental ideas about tubes that, if well understood, will be quite valuable in locating faults.

1. If a tube is working normally a reasonably exact reproduction of any voltage applied to the input of the tube will be found across any impedance placed in the plate circuit of the tube.
2. The reproduced voltage may be either greater or less than the impressed voltage depending upon the mutual conductance of the tube and the magnitude of the impedance in the plate circuit **to the impressed frequency.**
3. If the impedance in the plate circuit is essentially constant over the frequency range of the impressed signals, the output frequencies should bear the same relation to each other as the input frequencies bear to each other.
4. If the impedance in the plate circuit changes radically over the frequency range of the input signals, the output frequencies to which the plate impedance is the highest will show the greatest amplification.

With the above ideas in mind, it is obvious that if a signal voltage is impressed on the grid of a tube, such as the RF amplifier tube, a voltage at signal frequency must appear at the plate of the tube if it is working. Since this is true it is possible to definitely prove whether the failure of an RF or IF transformer to deliver output voltage is due to a defect in the transformer or whether the transformer is not receiving voltage at its primary terminals.

RF COILS

RF coils are very much like antenna coils in many respects and can be expected to have similar types of trouble and require similar methods of checking. There is this one important difference between antenna and RF circuits however: the gain of the antenna coil is independent of the AVC voltage on any tube, since the gain is measured from the antenna to the first grid. Thus no tube is included in the measured circuit and the gain of the circuit will not be changed by the bias on the first tube (unless the tube loses all of its bias and constitutes a load on the tuned circuit).

In the case of the RF coil the measurement is made from the grid of the RF tube to the grid of the next tube. The measured circuit therefore is influenced by the AVC voltage on the tube included in the measured circuit. For highest gain a weak signal should be employed so that the AVC voltage is a minimum and the sensitivity is a maximum. Under these conditions the average gain of an RF stage in a two-gang TRF receiver may be as high as 75. In receivers of the same type but with more stages the gain-per-stage is lower, dropping down as low as 25 in receivers with four gangs. Multi-band superheterodyne receivers may have an RF stage-gain even lower, and may be as low as ten. This low gain is chosen purposely so that the sensitivity on the broadcast band will be about equal to or less than the sensitivity on the high-frequency bands. The reason for this choice is that there is a great deal more thermal noise generated in the Broadcast-band antenna coil than in the Short-Wave-band antenna coils and the receiver may therefore be made more sensitive on the Short-Wave bands than on the Broadcast band before internal set noises limit the useful sensitivity.

OSCILLATOR COILS

The conventional oscillator coil is an even simpler device than the average antenna or RF coil. The method of checking the coil itself need hardly be explained. An ohmmeter is usually all that is necessary.

To prove that an oscillator is working, it is only necessary to touch the probe of the Oscillator channel of the **Analyst** to the stator connection of the oscillator tuning condenser, and at the same time, with the Attenuator set for maximum sensitivity, the dial of the Oscillator channel, is rotated to see if any oscillator voltage is picked up at any frequency within the range of the **Analyst**.

If a voltage is picked up, its frequency can be measured most accurately if the oscillator probe is placed not on the stator connection itself but merely close to it, so as to disturb the circuit least. When the oscillator probe is so placed, the pickup from the oscillator circuit may be so low that the indicator shadow will not close completely and, in fact, may give only a slight flicker as the tuning dial is rotated through resonance, but enough indication will be obtained to determine the oscillator frequency.

Another method of checking for oscillation, but one that gives no hint of the operating frequency, or a method that may be used for checking oscillators out of the tuning range of the **Analyst**, is to check the voltage developed across the grid-leak of the oscillator, if it has one. For this test the prod of the Electronic Voltmeter channel is touched to the grid of the oscillator tube and the voltage measured. The isolating resistor in the prod handle should prevent the measuring circuit from having any influence on the oscillator unless it was in a very unstable condition on the border line between operating and not operating. If this method of testing is used it is always advisable to perform the test in two parts. First, check the voltage across the grid-leak, then short-circuit the oscillator tuning condenser to observe that the voltage drops to zero when the condenser is short-circuited, proving that the voltage measured is actually caused by the oscillation.

The fact that an oscillator works and delivers the proper amount of output voltage does not necessarily mean that the oscillator circuit is free from trouble. It may be operating at an incorrect frequency due to some fault in the padding circuit, or in the switching of pads in multiple-wave receivers. In high-frequency oscillator circuits, the frequency is sometimes incorrect because a by-pass condenser has opened up, increasing the length of conductor in the circuit which can cause quite an appreciable effect when the frequency of the circuit is high enough, because a large part of the circuit inductance is in the leads themselves.

If the receiver is operating properly up to and including the Mixer, the oscillator frequency should be equal to the sum of the intermediate frequency plus the input-signal frequency.

MIXERS

If a signal is traced to the mixer grid and yet no signal can be picked up on the first IF grid, the failure may be due to several causes.

1. The mixer tube may be defective or may be inoperative due to absence of proper operating voltages.
2. The oscillator may not be working.
3. The oscillator may be operating at the wrong frequency, delivering an intermediate frequency that will not pass the IF transformer.
4. The IF transformer may be defective.

The first condition may be checked easily by placing the RF-IF probe on the plate connection of the mixer tube and tuning the RF-IF channel to the signal frequency. Even though the plate circuit is not tuned to that frequency, some signal should be picked up. A lack of voltage at signal frequency is fairly good evidence that the tube is not amplifying, either because the tube is defective, because there are some open connections to the tube, or because the set is not supplying the proper voltages to the tube. A new tube can be tried to check the first idea, and the second and third ideas can be checked with the "Electronic Voltmeter."

If a voltage at signal frequency is picked up in the plate circuit of the tube, but no other voltage is found at any frequency, it is quite likely that there is no oscillator voltage being injected into the Mixer either by internal coupling, as in the case of pentagrid or composite oscillators, or from a separate oscillator tube as in the case where there is no oscillator action within the mixer tube. In the former case, the oscillator is obviously not working, while in the latter case the oscillator may be working but some circuit fault may be preventing the oscillator voltage from being injected into the Mixer. In the latter case, the oscillator should be checked, as described in the section on Oscillators.

If a voltage is found at a frequency that does not correspond to the intermediate frequency of the receiver, the oscillator is working at the wrong frequency producing a signal that will not pass the IF transformer. In such a case the oscillator is mis-tracked, perhaps due to a natural drift in the oscillator padding or trimming condensers, or because of a failure in the padding circuit either by a shorted padding condenser if the frequency is below the normal intermediate frequency, or by a partially open condenser if the frequency is higher than the normal intermediate frequency.

If a voltage is picked up at the proper intermediate frequency at the plate of the mixer tube and no voltage appears at the first IF grid the transformer is obviously defective.

I. F. TRANSFORMERS

I. F. Transformers may be divided into the following general classes: untuned, single-tuned, double-tuned, triple-tuned, discriminator, band-expanding and special transformers that have some feature peculiar to themselves to accomplish some special purpose. A few examples of the latter type are transformers with taps to reduce the impedance connected into the plate circuit of a tube, or with a tap to reduce the voltage output, or transformers with one or more extra windings, untuned but closely coupled to a tuned circuit to accomplish the isolation of the low side of a circuit carrying I. F. voltage, so that delayed AVC may be obtained, or some other special feature accomplished.

All the above transformers serve the purpose of presenting to the plate circuit of one tube, an impedance appropriate to develop output voltage across this impedanc and to transfer some of these voltages to the next tube. The band-width of frequencies passed on to the next tube is a function of the amount of selectivity in the circuit or circuits coupled to the primary.

The troubles likely to occur in IF transformers are very much like those that can occur in RF coils and the method of checking the circuits is quite similar. It is again the process of tracing the signal until the point is discovered where the voltage disappears, gets weak, becomes distorted or becomes noisy. The normal gain for input IF transformers converting from RF voltage on the grid of the Mixer to IF voltage on the grid of the first IF tube varies with the design of the receiver from 20 to 100 but may vary even outside these limits in some designs. Output IF transformers for sets with only one IF stage usually have gain from IF 30% modulated at the last IF grid to audio signal at the detector output of 50 to 100. In making these tests, as in the case of RF stage gain, the signals must be weak enough that the AVC is inoperative or the AVC circuit should be blocked while the measurements are being made.

The most likely trouble with IF transformers is electrolytic corrosion of the primary winding. This is particularly true in damp climates and in receivers having little heat dissipation, such as battery-operated receivers using 2-volt or 1.4-volt tubes and obtaining their "B" supply from batteries.

Noisy IF transformers are frequently the warning that failure due to corrosion is about to take place but this condition is not always true.

A. V. C.

When a service oscillator is available, the AVC action of the receiver should be checked since sometimes the trouble in a receiver can be caused by a failure in that circuit. With the generator connected to the antenna and ground terminals of the receiver, the Electronic Voltmeter should be connected to each grid in turn in the RF or IF sections of the receiver and the AVC voltage measured at each grid at various input-signal levels. Since there is no hard and fast rule that

can be set down concerning the number of tubes controlled in a receiver, or the percent of available AVC voltage applied to each tube, the only general statements that can be made are the following:

1. In a receiver with one IF stage it is the usual practice to apply full AVC voltage to the IF, Mixer and RF tube (if any). Sets having composite oscillators usually have no AVC on the Mixer (composite oscillator).
2. In receivers with two IF stages it is frequently the practice to apply only a portion of the available AVC voltage to the second IF tube. This portion is usually one-half or one-third. In some receivers of this type no AVC voltage is applied to the last IF tube.
3. In high-frequency receivers, or on the higher frequency bands of multi-wave receivers the AVC voltage is frequently removed from the Mixer circuit.

TESTING SHORT WAVE OPERATION

The **Analyst** contains equipment for checking the antenna and RF portions of a Broadcast receiver or the Broadcast portions of a multi-wave receiver, but it does not have facilities for checking the RF section for short-wave operation. A device is provided, however, for checking the operation of the short-wave oscillator up to 15,000 kc. If the set does not function on short waves, the oscillator is working properly over its entire range, and tests on the Broadcast band indicate that the receiver is working properly overall on that band, it is obvious that the failure on Short Waves must be ahead of the mixer tube. With the trouble localized to that extent, it should be relatively simple to locate the actual defect.

INTERMITTENT OPERATION

The Analyst is particularly adapted to solving the troubles that exist in receivers that are intermittently operative, that is, receivers that "cut out" for no apparent reason. If servicing is attempted by the ordinary methods, the mere connection of test instruments frequently restores the set to its normal operating condition and many hours of effort are sometimes necessary before it is possible to locate the faulty unit.

By means of the **Analyst,** which has five indicators to check the performance of the receiver at as many strategic points simultaneously, it is possible to localize the fault to a certain portion of the receiver the **first time** that the signal fades.

Figure 6 shows a block diagram of a conventional superheterodyne receiver and the points where the various channels of the **Analyst** are normally connected for the first test on an intermittent receiver. Figure 7 shows, in a similar type of diagram, the most logical places to connect the indicators to a conventional TRF receiver.

The controls can be set so that all four indicator shadows just close and the Voltmeter reads the AVC voltage. Then, if a fault occurs, the appearance of some, or all, of the indicators will change, indicating the portion of the receiver in which operation is not normal. In other words, all of the necessary test instruments are connected to the receiver before the fault occurs so that they may be observed during the faulty operation of the receiver without disturbing the set. Formerly the disturbance occasioned by connecting test instruments frequently restored normal operation, and stopped any chance of finding the defective part until the next fade, at which time again the process of testing may have restored normal operation making it virtually impossible to find the defective part except by sheer good luck or by the expenditure of a prohibitive amount of time.

If the last indicator that shows normal signal, and the first indicator that shows abnormal signal, are separated by several circuits or stages, it is usually possible to attach the test prods to points closer together for the second test to restrict the part of the receiver under test so that on the second fade the defective part can be located more closely. Sometimes a third operation is possible, narrowing down still more the region that must be closely inspected for the faulty unit, but usually the region is so restricted by the second test that it is a simple matter to locate the defective part.

The points to which the indicators are connected for the second test will occur naturally to the Serviceman after observing which indicators showed abnormal signal in the first test.

NOISE

Noise in a radio receiver may come from any one of the following sources and perhaps more:

1. Noise in the transmitted program, which is very rare except for undesired hum that often accompanies the use of temporary lines to connect an outside pickup to the studio. This is especially likely to happen if a storm has disrupted the normal line service.
2. Noise picked up on the antenna with the signal. Such noise is generally locally produced by sparking electrical equipment such as elevator control panels, X-Ray equipment or diathermy machines. Occasionally static generated by heavy belts on rotating machinery may cause trouble but usually the atmospheric conditions must be exactly right for the production of enough electricity to be objectionable. Smoke and dust precipitators and ozone generators frequently produce considerable interference if the antenna is close enough to such sources.
3. Noise voltages may be strong on the line supplying power to the radio set, and since many receivers use no ground connection but rely on the power lines to provide a ground connection, any noises on the line arriving at the receiver travel through the primary of the antenna coil out onto the antenna and produce in the receiver almost as much noise as if the noise had originated in the antenna and traveled through the conventional path to ground.
4. Noise of thermal agitation is produced in the conductors of all the tuned circuits, but only that produced in the first circuit is usually of any importance since the noise produced at that point has the maximum amount of amplification following it. The first, and in some cases the second tube, produces so much noise that the noise contributions of the second and succeeding tuned circuits can usually be neglected. It is only when listening to very weak signals that this type of noise is bothersome. It is this noise that limits the ultimate useful sensitivity of a receiver.

   Occasionally a receiver will give evidence of this kind of noise and will give a weak response on a strong local station. When this occurs it is quite certain that there is some interruption of the signal that prevents the receiver from deliver-

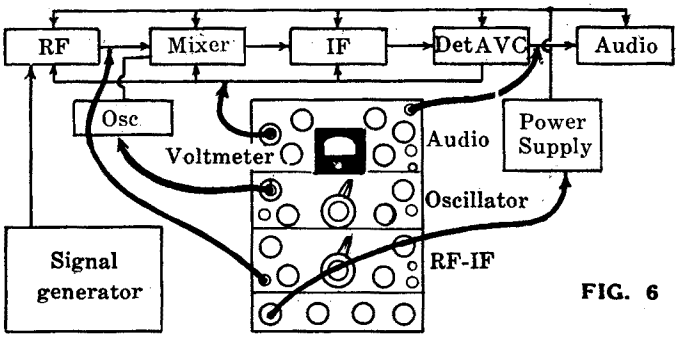

FIG. 6

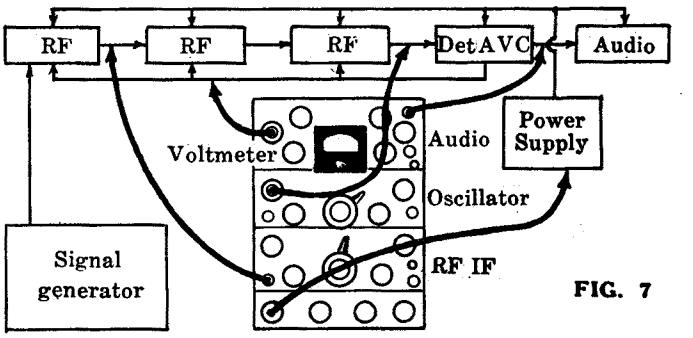

FIG. 7

ing a normal signal to the first grid, or even to the second grid (in receivers with high sensitivity).

5. Noise may be actually generated in the receiver by high-resistance leakage paths across high-impedance tuned circuits. This leakage may be inside of a vacuum tube or may be across any piece of low-grade insulation that happens to be located in a strategic place .
6. Noise may be generated by some of the more common agencies such as loose welds in the tubes, loose connections in the receiver, or may even be generated by such agencies as the voice coil of the speaker short-circuiting to the pole piece as it vibrates. High powered receivers have even been seen to generate sparks in the air-gap of the speaker as the voice coil rubbed against the pole piece with one side of the circuit purposely grounded because of certain design considerations.
7. Noise may be generated sometimes only when some part is in motion, as a tuning condenser that is barely short-circuiting as it is turned, the wave-band switch may have dirty contacts, the wipers on the condenser shaft may be dirty, or on a sensitive receiver, the motion of some parts in the drive may generate noise by intermittent contact in much the same way as a screwdriver point drawn lightly over the chassis of a sensitive receiver will generate noises that are reasonably loud if the set is operating at maximum sensitivity.

In testing the receiver for noise, the same signal-tracing procedure is followed as in the case of checking a signal, but in this case the receiver is tuned to no station so that the noise may be heard most strongly. The point in the set at which the noise first makes its appearance can easily be found and appropriate steps taken to remedy it.

In the case of a strong hum on all stations in place of an intermittent crackling noise, it may be necessary to make the test with the receiver tuned to some station because the hum modulation may not occur without the presence of a carrier.

DISTORTION

Distortion can occur in almost any tube in a receiver. It is usually confined, however, to the stages working at relatively high levels such as the diode driver tube, the detector or the power output tubes. The place where the distortion occurs can easily be found by careful listening with the aid of the appropriate section of the **Analyst** in exactly the same fashion as tracing a signal through the set to check for appropriate gain-per-stage. If an oscillograph and a signal generator are available, the constant tone and wave shape of the signal from the signal generator may be applied to the input of the receiver and the oscillograph may be used in conjunction with the appropriate channels of the **Analyst** to check the wave shape at each tube in the receiver. This method is particularly recommended to those Servicemen who have little ability to recognize distortion or who may have defective hearing. In such cases it will be necessary for the Serviceman to have someone with keen hearing listen to a signal that looks mildly distorted on the oscillograph and obtain some idea of how badly distorted a wave may be before it sounds objectionable to some one with good hearing.

Three of the most likely causes of distortion are listed here below:

1. Leaky coupling condensers in the audio circuit decrease the normal bias of the tube whose grid is connected to the defective condenser. In some cases the leakage is large enough to make the grid actually positive which will make the quality very bad and in many cases will quickly ruin the tube, especially if the tube is an output tube. The excessive current drawn may damage the rectifier tube or power transformer as well.
2. An open fixed tone-control condenser in the plate circuit of a pentode output tube will allow the harmonics generated in the tube to be reproduced in accentuated amount causing a particularly objectionable type of distortion.
3. At high signal levels, receivers having a diode detector may show bad distortion at the diode or at the plate of the diode driver tube because of the inability of the tube to drive the diode when operating with high AVC voltage. The remedy in many cases is to divide the AVC voltage and apply to the doide driver tube only one-third to one-half of the available voltage.

SPECIAL CIRCUITS

In receivers employing separate AVC amplifier or detectors for the purpose of supplying amplified or delayed AVC action, the process of tracing the signal is no different than in the conventional receiver, except that there is the additional branch circuit to trace.

In receivers employing AFC there is almost always a switch to place the set in conventional operation in which state it is as easy to trace the progress of the signal as in the standard type of receiver. Having proven the operation of the circuit satisfactory in the conventional arrangement, it is then easy to check the action of the AFC circuit.

Receivers employing "Q" or noise-suppression circuits can be traced through at relatively high signal inputs so that the suppression circuits are sure to be unlocked if working properly, and then the action of the suppression circuit may be checked by means of the Electronic Voltmeter as the signal level is changed permitting the suppression circuit to operate.

ALIGNMENT WITH THE ANALYST

For alignment purposes, the **Analyst** can be conveniently used either with a calibrated test oscillator or with a received signal of known frequency. If the receiver to be aligned is of the TRF type and has merely drifted out of adjustment it will probably have enough sensitivity to operate the speaker when the signal is fed into the antenna and ground terminals of the receiver. In such a case, the Audio prod is connected to some convenient point in the audio system furnishing audio voltage, and the Audio channel used as an output meter. The receiver is then aligned in the conventional manner.

If the receiver is quite far out of adjustment or if no signal is available strong enough to give output from the speaker for alignment purposes, the RF-IF section of the **Analyst** may be used in the following manner: Set the receiver dial to indicate the frequency of the station or signal used for alignment. Set the gain controls on the RF-IF channel for maximum sensitivity. Connect the prod of the RF-IF section to the plate of the first tube in the receiver and tune the RF-IF amplifier to the frequency of the desired station. The antenna trimmer is then adjusted for maximum signal. The prod may then be moved to the second plate circuit and the second grid circuit aligned. This procedure may be followed as far as necessary, reverting to the Audio channel as an output meter if more convenient.

If the receiver is a superheterodyne the RF-IF probe should be clipped to the plate of the mixer tube, the receiver dial set to the known frequency of the signal used (somewhere near 1400 kc or any other frequency specified by the manufacturer as the alignment frequency), the **Analyst** tuned to the same frequency, the oscillator blocked by short-circuiting its tuning condenser, and the antenna and RF trimmers, if any, adjusted for maximum response. The RF-IF channel should then be tuned to the intermediate frequency specified by the manufacturer, the short-circuit removed from the oscillator tuning condenser and the oscillator trimmer adjusted until the signal in the RF-IF channel is maximum. The **Analyst** is then tuned to a signal near 600 kc when the prod is connected to the antenna. The prod is then moved to the mixer plate, the oscillator stopped and the receiver tuned for maximum response. The **Analyst** is then set to the same intermediate frequency as before and the oscillator padding condenser adjusted for maximum response in the **Analyst**. Since the 600 kc adjustment changes the 1400-kc adjustment slightly, it is wise to readjust the trimmers at 1400 kc. By following the above procedure it is not necessary to rock the gang condenser while adjusting the padding condenser.

The IF amplifier is then aligned by adjusting the input-IF trimmer with the prod of the RF-IF tuner on the plate of the first IF amplifier. If the set has two IF stages, the prod is then moved to the second-IF plate and the second IF transformer trimmed. The Audio

prod is attached to any convenient point in the audio system for adjustment of the output-IF amplifier.

AC-DC RECEIVERS

In normal operation, on an AC receiver, the ground clip of the **Analyst** is attached to the chassis of the receiver and permitted to remain there during the entire testing of the receiver. When AC-DC receivers are tested it must be remembered that the operating circuits of the receiver are not isolated from the line and therefore the **Analyst** cannot be connected to the chassis or the minus "B" connection in the receiver and at the same time rest on a grounded metal table without excessive danger of trouble. If all parts of the work bench and the floor are of insulating material or of DRY wood and there are no grounded objects around such as a radiator or sink, it is reasonably safe to use the **Analyst** on AC-DC sets with the same facility as on straight AC sets, but it would be unquestionably better practice to use a well-insulated one-to-one ratio isolalating transformer to supply power to the **Analyst** and to the AC-DC receiver.

PERIODIC ADJUSTMENTS

As in almost any electronic instrument, an occasional adjustment is necessary to assure its greatest accuracy. Instructions are given below for making the necessary adjustments to keep the Meissner Analyst always at peak efficiency.

The Electronic Voltmeter circuit, once properly adjusted, will hold its adjustment for long periods of time. If, however, it becomes necessary to replace the 6C5 voltmeter tube, a slight re-adjustment will be necessary to assure the greatest accuracy.

The Electronic Voltmeter has two adjustments, the Zero Set on the front panel, and the Voltmeter Sensitivity Adjustment at the rear of the chassis. The simplest method of adjustment is as follows:

With the Range Selector set for the 5-0-5 volt scale, adjust the Zero Set for zero reading on the meter and apply the prod to a known voltage of 4 to 5 volts. This voltage may conveniently be a 4½-volt "C" battery whose voltage has been previously measured with a conventional 1000-ohms-per-volt metel. If the meter does not indicate the correct voltage, adjust the control on the rear of the chassis until it does. Remove the prod from the battery and re-adjust the Zero Set control for zero meter reading. For greatest accuracy, this procedure should be repeated several times, adjusting the Sensitivity Control on the rear of the chassis with the prod on the battery, then adjusting the Zero Set control with the prod removed from the battery. This is advisable because each of these controls has some effect on the other.

The Voltmeter, once adjusted on the lowest scale, is subject to further small errors on the higher scales because of the tolerance on the resistors making up the multipliers. Even with the errors caused by slight deviation of the multiplier resistors from their theoretically correct values, the voltage values read on high-impedance circuits are usually a great deal more accurate than with an absolutely accurate meter of 1000-ohms-per-volt resistance connected in the same place. The latter instrument would load the high-impedance circuit so heavily that the meter would not give indications representing operating circuit conditions but would read the **disturbed condition** caused by the voltmeter loading.

Greater accuracy on the multipliers is possible with wire-wound resistors but the cost is prohibitive when resistances of such high value as ten megohms are used.

The Oscillator section is operative without adjustment but has trimmer condensers so that each range may be made to indicate the frequency to which the oscillator section is tuned. Since the frequency of a signal is sometimes the only evidence of trouble in a receiver, it is wise to adjust calibration as accurately as possible. Signal generators that have been in use for some time should not be relied upon to be correct in frequency, but should be checked for accuracy before being used as frequency standards for adjusting the calibration of the ANALYST.

The range switch should next be set to the proper band, the black test cable should be plugged into the Oscillator input jack, the prod connected to the output terminal of the signal generator and the ground lead from the ANALYST connected to the ground post of the signal generator. The attenuator should be turned counterclockwise, the dial and the signal generator should be set to the proper calibrating frequency and the corresponding trimmer on the small coil adjusted for minimum shadow angle. If the generator output is more than enough to close the shadow, the attenuator should be adjusted so that the eye nearly closes, since a narrow shadow angle promotes accuracy of adjustment. The aligning frequencies and trimmer positions are given below.

BAND	CALIBRATING FREQUENCY	TRIMMER POSITION
1	12.0 MC	Bottom
2	4.0 MC	Middle
3	1.4 MC	Top

The **black** test lead is used in the operation above to get enough sensitivity to operate from the signal generator. Ordinarily when checking the voltage from an oscillator tube, the **brown** test lead should be used.

The RF-IF channel requires practically the same accuracy in frequency calibration as the Oscillator section. Accordingly, a signal generator should be used in adjusting the RF-IF channel so that it has an accurate frequency calibration.

The connections from the signal generator to the ANALYST are the same as for the Oscillator adjustment except that the cable with the **red** tracer is used and is plugged into the input jack of the RF-IF test panel.

The RF-IF tuning assembly consists of a three stage TRF amplifier without an antenna coil and is aligned in exactly the same manner as a TRF receiver.

The range switch should be set to the desired range, the RF-IF tuning knob and the signal generator set to the proper aligning frequency and the trimmers adjusted for minimum shadow angle on the RF-IF tuning indicator. The trimmers are reached through holes in the coil shield. The isolated holes at one edge of the unit are for band 1 trimmers, the center holes for band 2 and the remaining holes are for band 3. The aligning frequencies are listed below:

BAND	ALIGN AT
~~X~~ 3	200 KC
~~X~~ 2	530 KC
~~X~~ 1	1400 KC

As the aligning progresses and sensitivity improves, the attenuator and multiplier should be adjusted to keep the indicator shadow angle very narrow, thereby obtaining greatest sensitivity of indication.

In order to calibrate the Line Current indicator with the greatest precision, an accurate AC ammeter is necessary, but since the normal power consumption of most receivers is not accurately known, the necessity for extreme accuracy is less urgent on this calibration than on some of the other calibrations. Therefore if an AC ammeter is not available, the calibration can be made with acceptable accuracy by setting the calibrating controls when a soldering iron of known power input or a lamp of known wattage is connected to the power socket in the ANALYST. The current drawn by any resistance load such as a lamp or soldering iron is quickly determined by dividing watts by line volts; for example, a 100 watt soldering iron at 115 volts draws 100 divided by 115 or .87 amp. approximately.

Check the arc of rotation of the line current pointer. It should stop exactly at the last line at the high-current end of the travel. If it does not do so, it should be so adjusted.

Set the pointer to indicate the current being drawn by the load, whether radio set, lamps, soldering iron, or what not. The value of current either being measured on an AC ammeter or calculated as described above.

Adjust the line current calibrating control at the bottom and rear of the chassis until the tuning indicator shadow just closes.

The audio channel requires no calibration or adjustment.

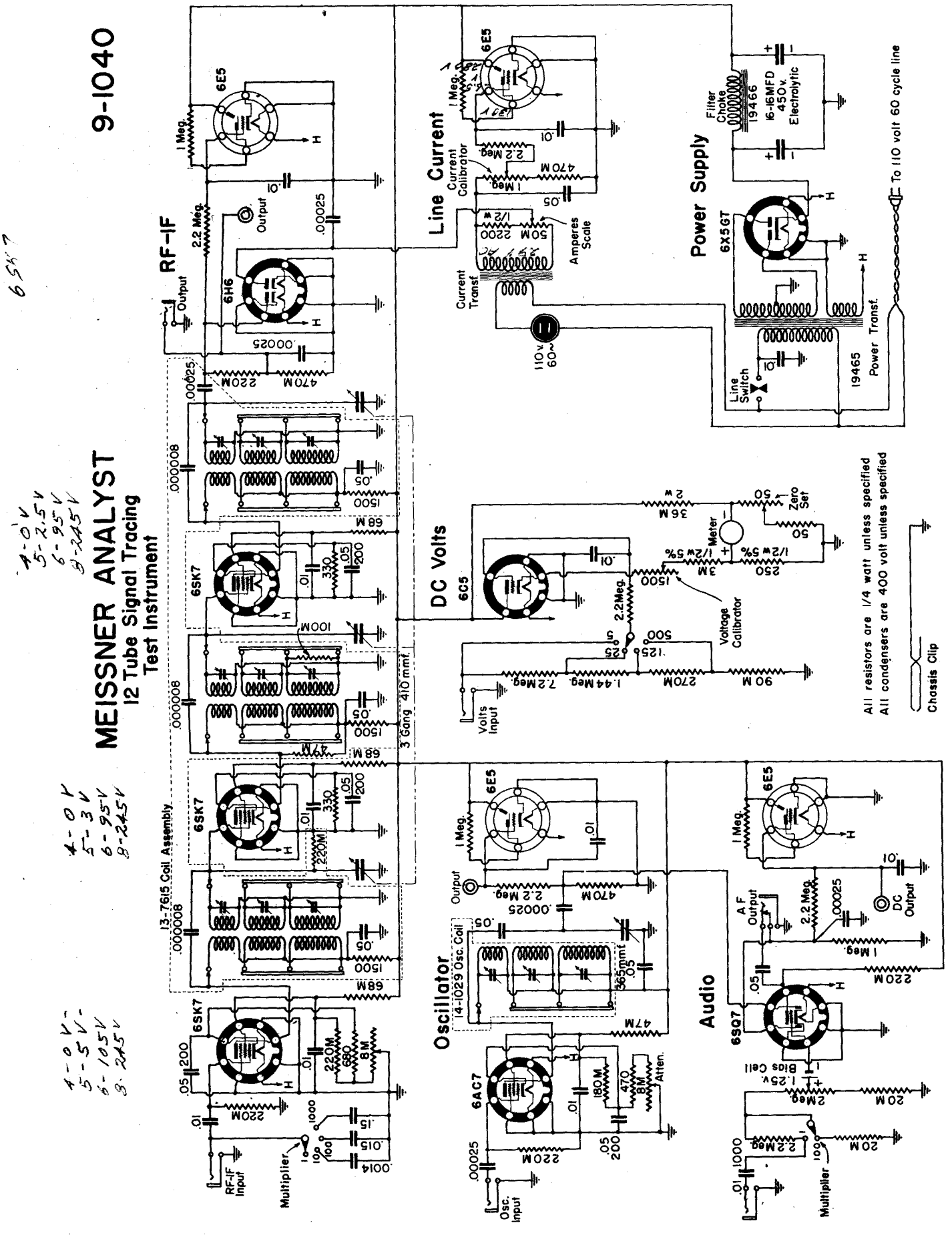
9-1040
MEISSNER ANALYST
12 Tube Signal Tracing
Test Instrument
RF-IF
Line Current
Power Supply
DC Volts
Oscillator
Audio
6E5
6H6
6SK7
6C5
6AC7
6SQ7
6X5GT
Output
Current Calibrator
Amperes Scale
Current Transf.
Filter Choke
19466
16-16MFD 450v. Electrolytic
To 110 volt 60 cycle line
Line Switch
19465 Power Transf.
Meter
Zero Set
Voltage Calibrator
Volts Input
All resistors are 1/4 watt unless specified
All condensers are 400 volt unless specified
Chassis Clip
3 Gang 410 mmf.
13-7615 Coil Assembly
14-1029 Osc. Coil
365 mmf.
Osc. Input
Atten.
RF-IF Input
Multiplier
DC Output
AF Output
Bias Cell
1.25v.
4-0V
5-3V
6-95V
8-245V
4-0V
5-2.5V
6-95V
8-245V
4-0V
5-5V
6-105V
8-245V

Service Notes