DU MONT MODEL 224-A

FREQUENCY RESPONSE

Vertical Amplifier 20 cps to 2 Mc (unifrom within 3 db)
Horizontal Amplifier 10 cps to 100 kc (uniform within 3 db)
Sweep Circuit 15 cps to 30 kc

DEFLECTION FACTORS

Vertical Amplifier 0.1 rms volt/inch
Vertical-Deflection Plates 25 rms volts/inch
Horizontal Amplifier 0.7 rms volt/inch
Horizontal-Deflection Plates 28 rms volts/inch

LINE RATING 115 volts, 60 cps

TUBE COMPLEMENT

Type	*Function*
6J5 (V1)	Vertical Amplifier
6AC7 (V2)	Vertical Amplifier
6AG7 (V3, V4)	Dual Vertical Amplifiers
3GP1 (V5)	Cathode-Ray Tube
6SN7 (V6)	Synchronizing and Horizontal Amplifiers
6Q5G (V7)	Horizontal Amplifier
6SG7 (V8, V9)	Dual Horizontal Amplifiers
5Z3 (V10)	Full-Wave Rectifier
80 (V11)	Half-Wave Rectifier
6V6GT (V12)	Voltage Control
6SJ7 (V13)	Voltage Regulator
991 (V14)	Neon Tube

The schematic circuit diagram of Model 224-A is shown in Fig. 22-10. Switch *S1* controls the attenuation of the vertical input, using resistive-capacitive elements which vary the impedance from *C1* to ground and, therefore, the input impedance of *V1* when *S2* is set for vertical input *Y* on the diagram.

S2 switches *V1* from the Y-input to the probe connector, or vice versa, as desired.

The power supply uses a straightforward circuit with the possible exception of the voltage-regulator system which is somewhat different to merit some special comment. Essentially, the 6V6GT *V12* is a variable plate-cathode resistance in series with *R59* and *R56*. Therefore, the voltage drops of these resistors are a function of the 6V6GT plate-cathode resistance which, in turn, is controlled by the source voltage and the control tube, a 6SJ7, marked *V13* on the diagram.

The *V12* screen and *V13* plate are connected to the +190-volt point in the circuit. This connection is made through *R71*. If the voltage across *C43* rises for any reason, the voltages across *R70* and *R69* increase and the bias on *V13* rises. The reduced current in *R71* causes an increased screen potential for *V12* and effectively reduces the plate current, causing in effect an increased plate resistance and a constant voltage drop effect in *V12* is obtained. If the supply voltage across *C43* drops, the resistance of *V12* goes down and, in any case, the potential across *C49* is a steady 190 volts d.c. Neon tube *V14* stabilizes the potential drop across that portion of *R69* connected between *C50* and ground. The voltage across *C50* is the control voltage for *V13*.

PARTS LIST FOR DU MONT MODEL 224-A

C1	0.2 μf. 400V.
C2	3-12 μμf. 500V.
C3	3-12 μμf. 500V.
C4	.001 μf. 500V.
C5	70 μμf. 500V.
C6	0.2 μf. 400V.
C7	100 μf. 50V. elec.
C8	0.1 μf. 1000V.
C9	0.5 μf. 600V.
C10	0.5 μf. 600V.
C11	4 μf. 600V.
C12	0.5 μf. 200V.
C13	0.5 μf. 600V.
C14	25 μf. 50V. elec.
C15	0.1 μf. 1000V.
C16	0.1 μf. 1000V.
C17	0.25 μf. 400V.
C18	.05 μf. 400V.
C19	0.1 μf. 1000V.
C20	0.1 μf. 1000V.
C21	0.5 μf. 600V.
C22	0.25 μf. 400V.
C23	70 μμf. 500V.
C24	3-12 μμf. 500V.
C25	100 μf. 50V. elec.
C26	0.2 μf. 400V.
C27	0.5 μf. 600V.
C28	3-12 μμf. 500V.
C29	0.15 μf. 400V.
C30	.04 μf. 400V.
C31	.01 μf. 400V.
C32	2500 μμf. 500V.
C33	600 μμf. 500V.
C34	150 μμf. 500V.
C35	25 μf. 50V. elec.
C36	0.5 μf. 600V.
C37	0.1 μf. 1000V.
C38	0.1 μf. 1000V.
C39	Deleted
C40	Deleted
C41	Deleted
C42	Deleted
C43	4 μf. 600V.
C44	4 μf. 600V.
C45	4 μf. 600V.
C46	0.5 μf. 1500V.
C47	0.5 μf. 1500V.
C48	0.5 μf. 600V.
C49	0.5 μf. 600V.
C50	0.5 μf. 600V.
C51	.05 μf. 400V.
C52	4-30 μμf. 500V.
C53	.05 μf. 1600V.
F1	3 amp. fuse
L1	70-250 μh.
L2	170 μh.
L3	170 μh.
L4	8.5 mh.
L5	8.5 mh.
L6	19 h. 150 ma.
R1	2 meg. ½W.±5%
R2	2 meg. ½W.±5%
R3	20 K ½W.±5%
R4	250 K ½W.±5%
R5	2 meg. ½W.
R6	50 ohm ½W.
R7	1 K ½W.
R8	1 K pot.
R9	110 ohm ½W.
R10	25 meg. 1W.
R11	75 K 1W.
R12	100 K ½W.
R13	2.5 K 1W.
R14	10 K 3W.
R15	50 ohm ½W.
R16	75 K ½W.
R17	100 K 1W.
R18	15 K ½W.
R19	470 ohm 3W.
R20	50 ohm ½W.
R21	3.5 K 10W. non ind.
R22	15 K 10W.
R23	3.5 K 10W. non ind.
R24	35 K ½W.
R25	500 K ½W.
R26	1.5 K ½W.
R27	8 K ½W.
R28	200 K C.T. pot.
R29	20 K ½W.
R30	10 K 1W.
R31	10 K 1W.
R32	1 K ½W.
R33	500 K 1W.
R34	4 meg. pot.
R35	250 K ½W.±5%
R36	2 meg. ½W.±5%
R37	2 meg. ½W.
R38	10 K ½W.
R39	10 K pot.
R40	Deleted
R41	3 meg. ½W.
R42	82K 3W.
R43	100 K 1W.
R44	50 ohm ½W.
R45	15 K ½W.
R46	2 K 1W.
R47	2 meg. ½W.
R48	50 ohm. ½W.
R49	82K 3W.
*R50	37.5 K 2W.
R51	20 K ½W.
R52	20 K ½W.
*R53	37.5 K 2W.
R54	5 meg. ½W.
R55	4 meg. dual pot.
R56	5 meg. ½W.
R57	5 meg. ½W.
R58	5 meg. ½W.
R59	100 K 1W.
R60	100 K 1W.
R61	4 meg. dual pot.
R62	10 K 1W.
R63	100 K. 1W.
R64	100 K pot.
R65	150 K 1W.
R66	500 K pot.
R67	750 K 1W.
R68	200 K 1W.
R69	500 K pot.
R70	500 K 1W.
R71	500 K 1W.
R72	100 K 1W.
R73	680 K ½W.±5%
R74	250 K ½W.±5%
R75	Deleted
R76	1 meg. 1W.
R77	500 K 1W.
R78	1 K pot.

*2-75 K 1W. in parallel

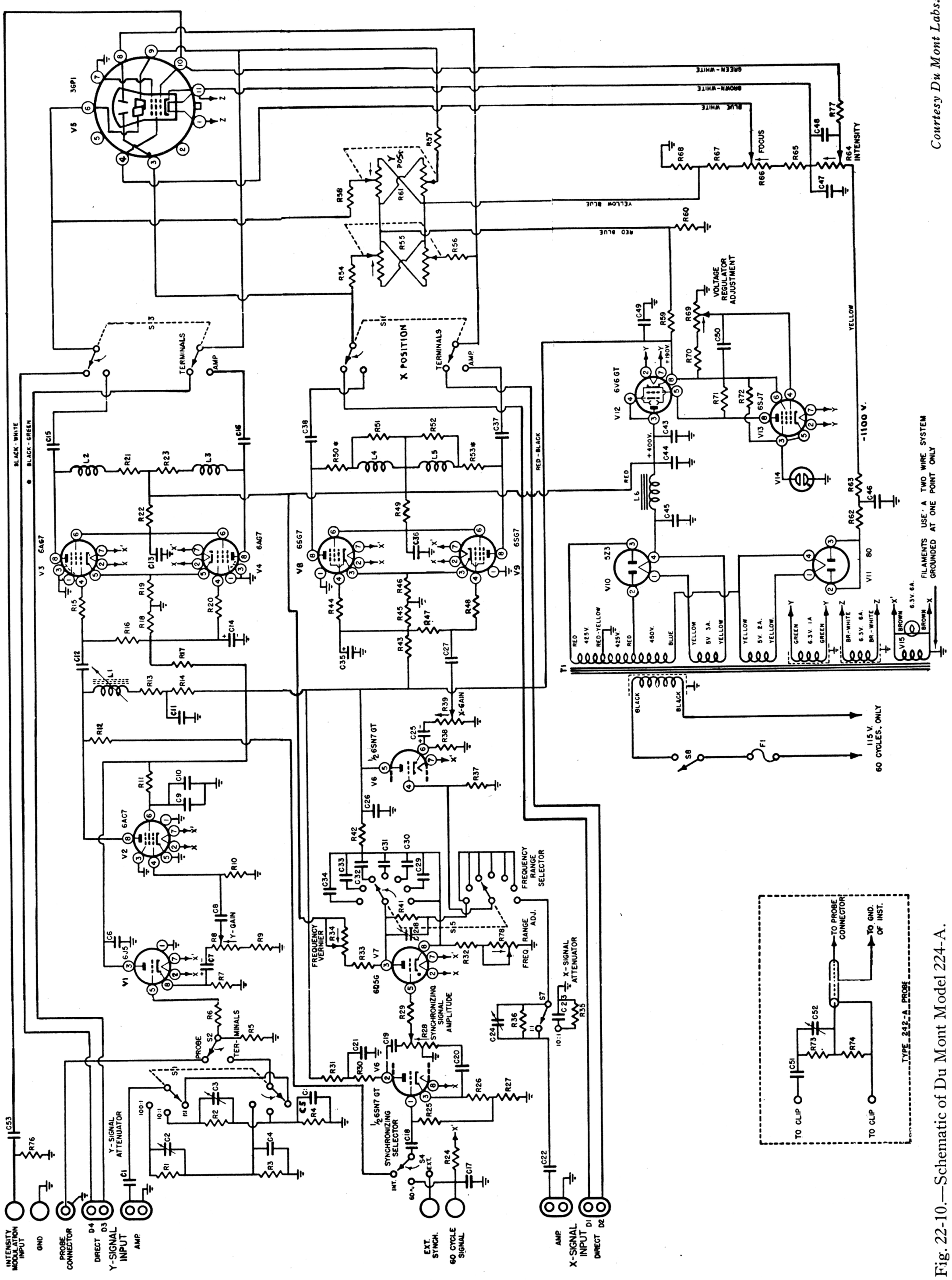

Fig. 22-10.—Schematic of Du Mont Model 224-A.

Courtesy Du Mont Labs.