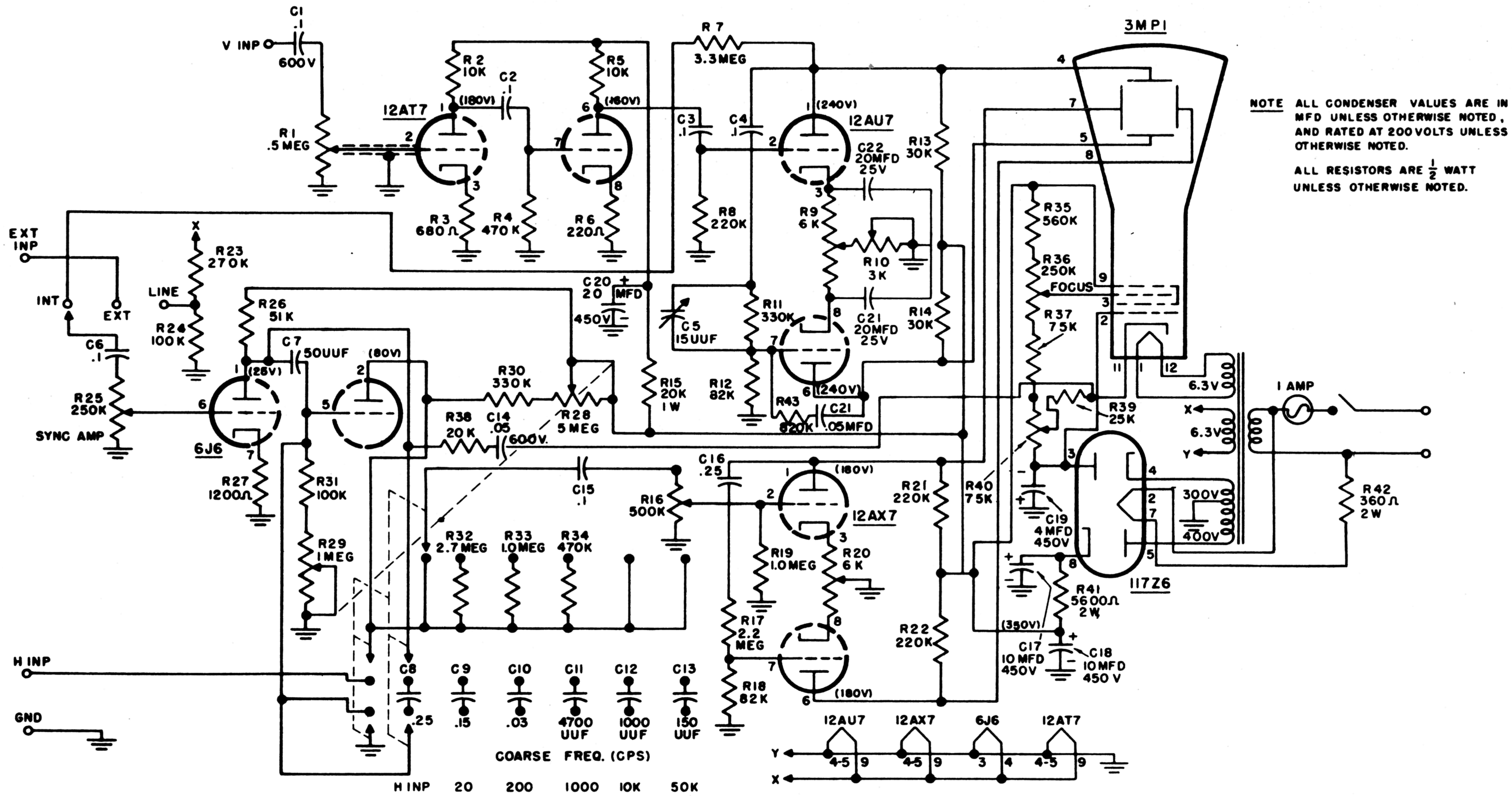

Fig. A-7. — Schematic of Radio City Products Model 533M.

Courtesy of Radio City Products.

Digital File Copyright © 2025 StevenJohnson.com
This digital file is provided free at Steve's Antique Technology
and may not be resold in any form.