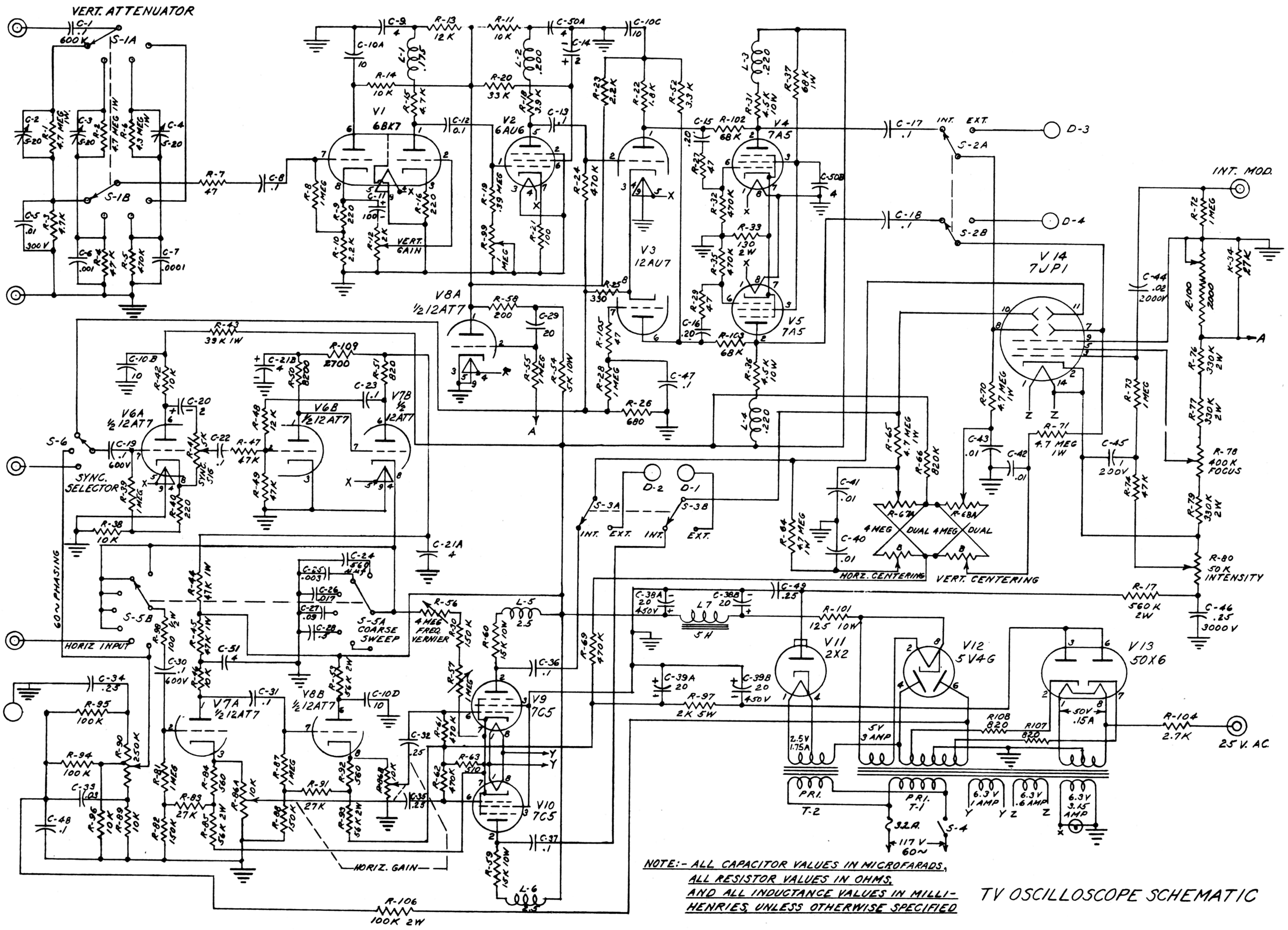

Fig. A-11. — Schematic of Sylvania Model 400.

Courtesy of Sylvania.

Digital File Copyright © 2025 StevenJohnson.com
This digital file is provided free at Steve's Antique Technology
and may not be resold in any form.