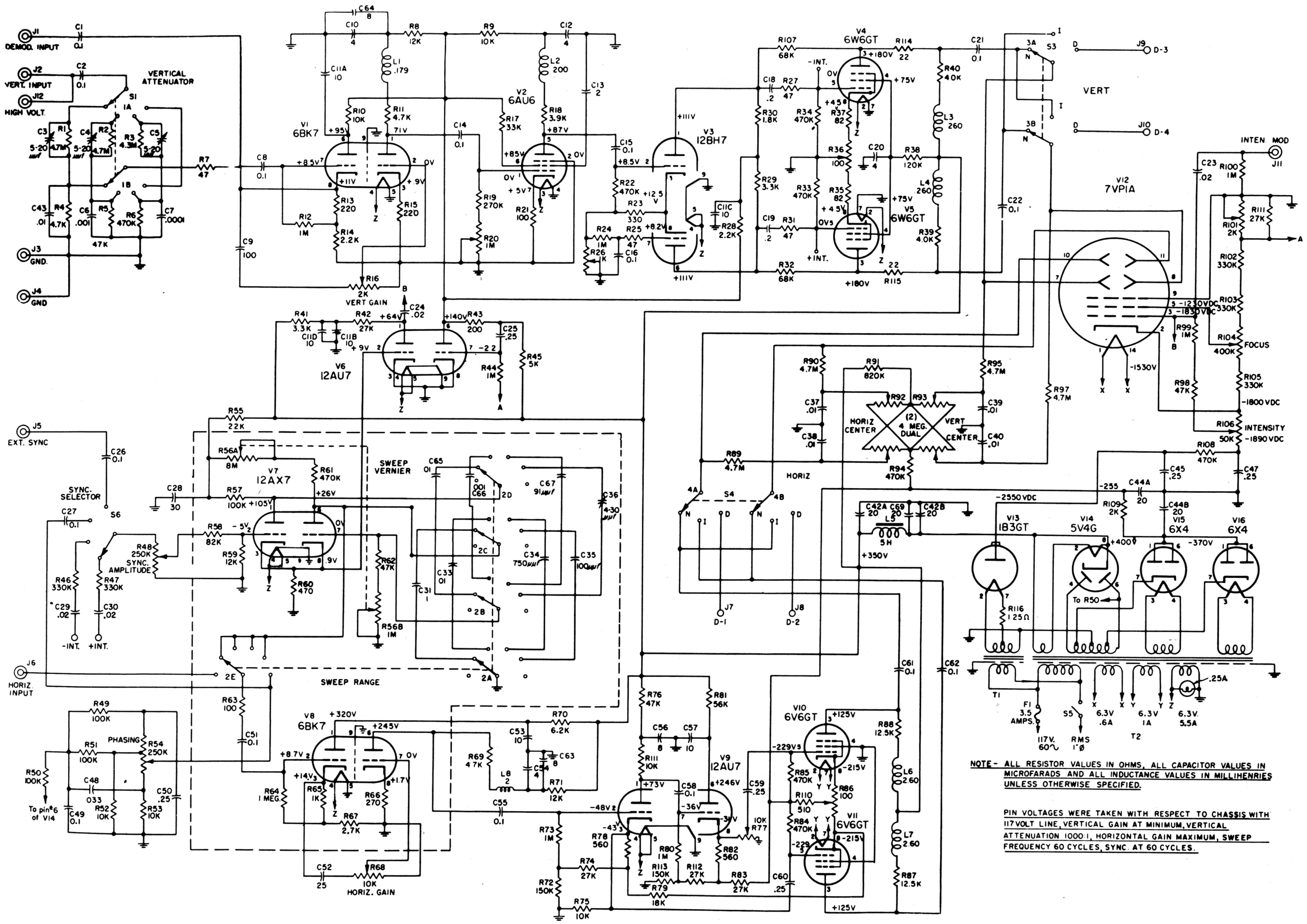


Fig. A-12. — Schematic of Sylvania Model 404.

*Courtesy of Sylvania.*

Digital File Copyright © 2025 StevenJohnson.com
This digital file is provided free at Steve's Antique Technology
and may not be resold in any form.